# DC Power Jack / PBS Series Push Switch

## PBS-22C02 ( Locked ) N

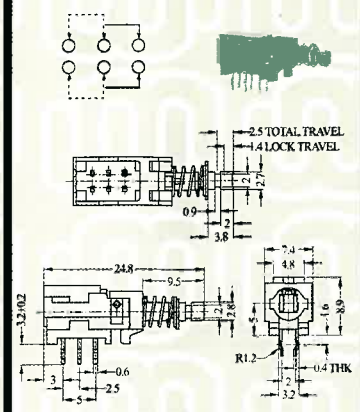


RATING: DC 50V 0.3A

## PBS-22H01 ( Locked ) N

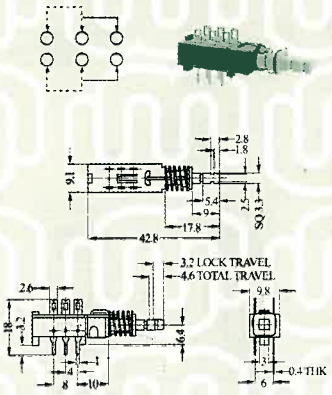


RATING: DC 50V 0.5A

## PBS-42H01 ( Locked ) N

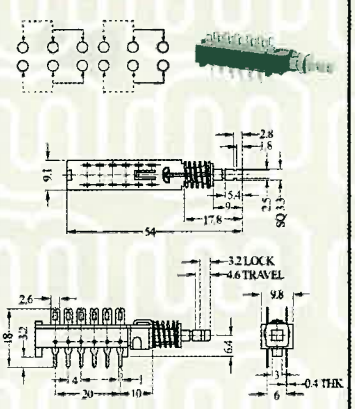


RATING: DC 50V 0.3A

## AS-203S

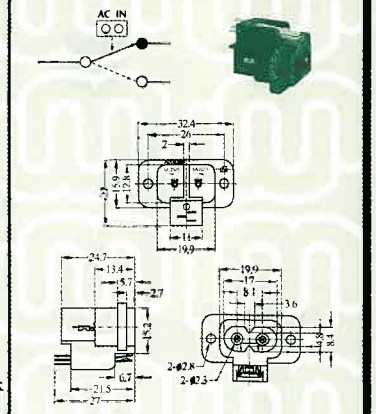


RATING: AC 250V 1A

## PBS-22D01 ( Locked ) N

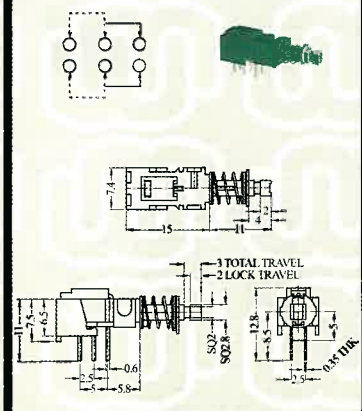


RATING: DC 50V 0.3A

## PBS-42D01 ( Locked ) N

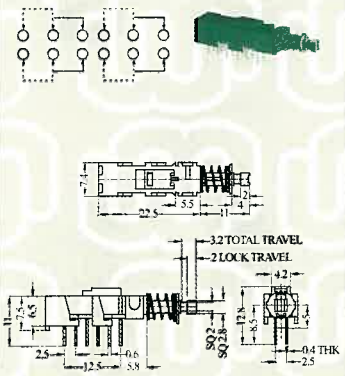


RATING: DC 50V 0.3A

## PBS-62E06 N

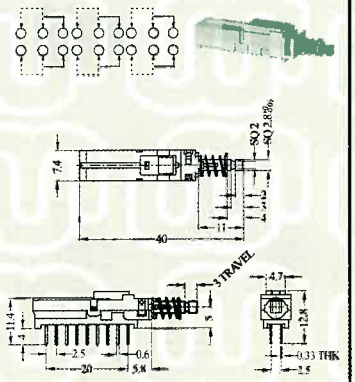


RATING: DC 50V 0.3A

## AS-204

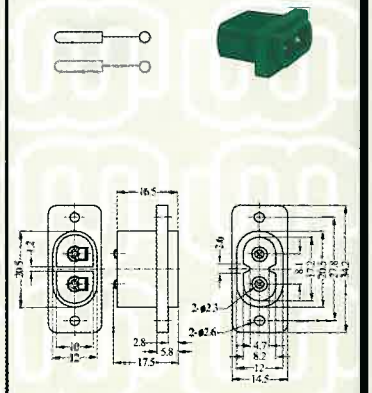

RATING: AC 250V 1A

## PBS-22D02 ( Locked ) N

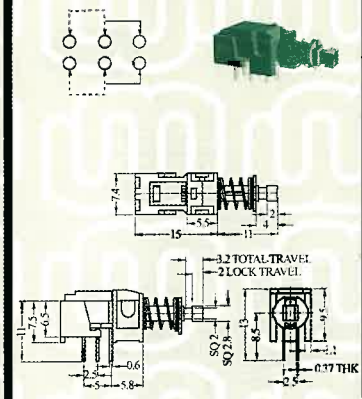


RATING: DC 50V 0.3A

## PBS-42D02 ( Locked ) N

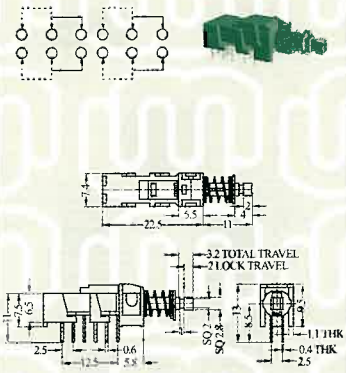


RATING: DC 50V 0.3A

## PBS-62H01 ( Locked ) N

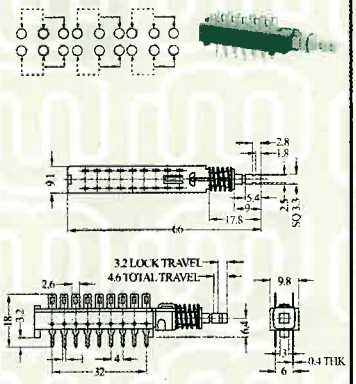


RATING: DC 50V 0.5A

## AS-208

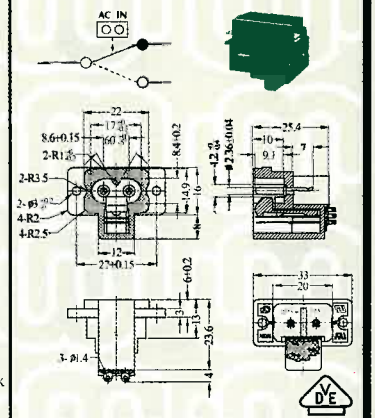


RATING: AC 250V 2.5A, DC 12V 1A

## PBS-22E01 ( Series ) N

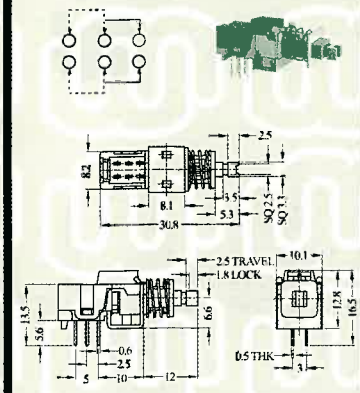


RATING: DC 50V 0.3A

## PBS-42E01 ( Series ) N

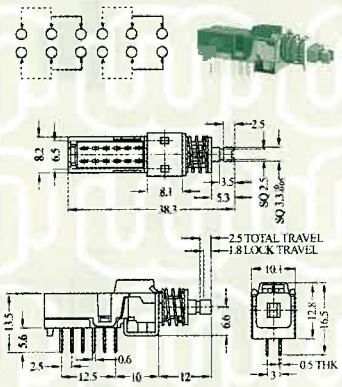


RATING: DC 50V 0.3A

## AS-203B

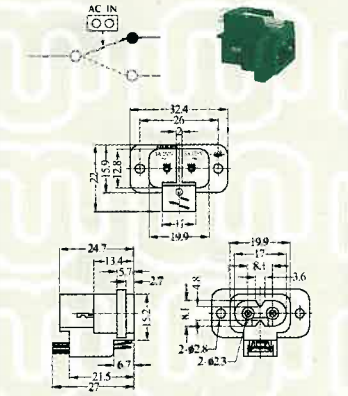


RATING: DC 12V 1A/AC 250V 1A

## AS-209

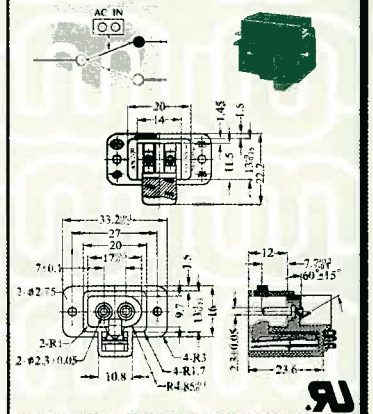


RATING: AC 250V 3.5A/DC 12V 1A

S SHORTING N NON-SHORTING



版權所有 翻印必究 ALL RIGHTS RESERVED

# AC Socket / DC Power Jack

## AS-211

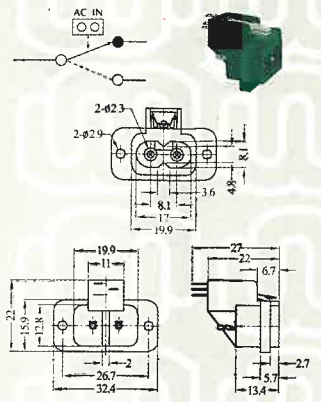

RATING: AC 250V 1A

## AS-338

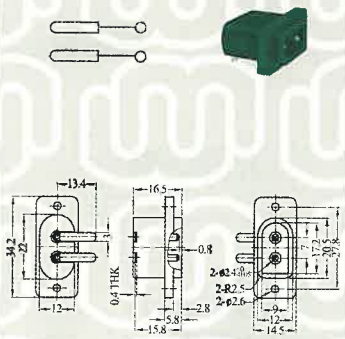

RATING: AC 250V 1A

## DS-026 (ø5.5mm Type)

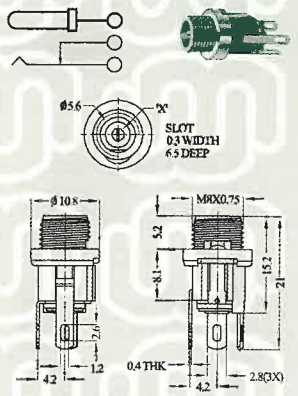

RATING: DC 30V 0.3A

## DS-205

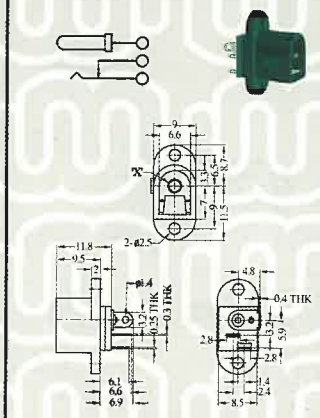

RATING: DC 30V 0.3A

## AS-214

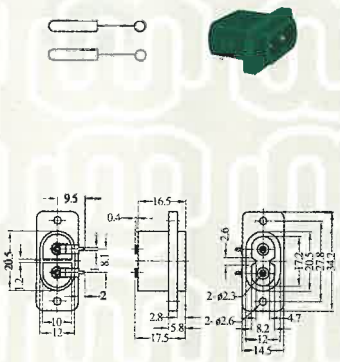

RATING: AC 250V 1A

## AS-339

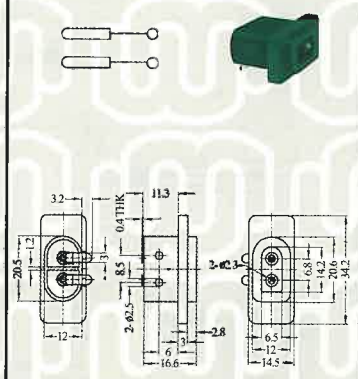

RATING: AC 250V 1A

## DS-046 (ø5.5mm Type)

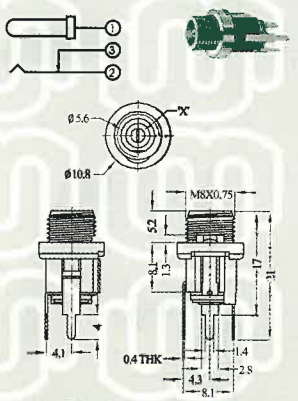

RATING: DC 30V 0.3A

## DS-208

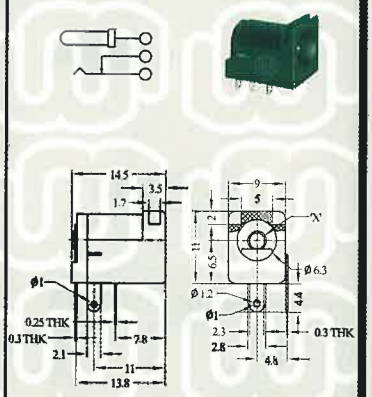

RATING: DC 30V 0.3A

## AS-215(WHITE)

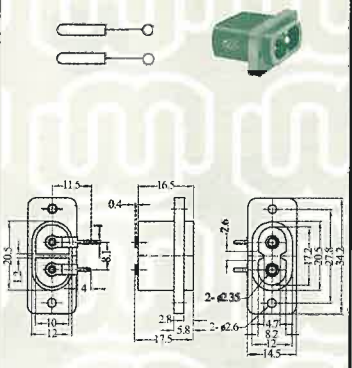

RATING: AC 250V 1A

## DS-012

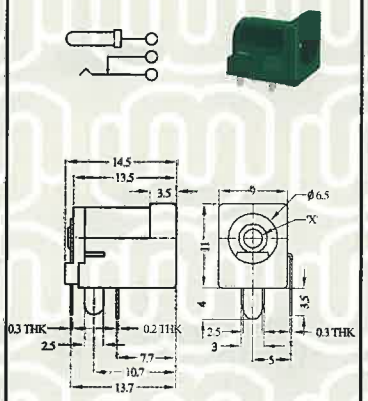

RATING: DC 30V 0.3A

## DS-048 (ø6.5mm Type)

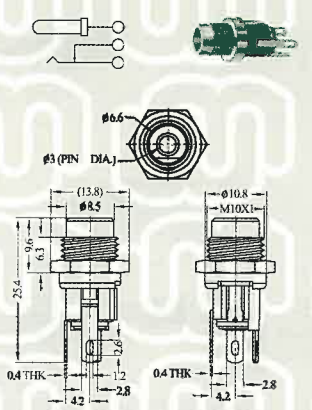

RATING: DC 30V 0.3A

## DS-209 (ø5.5mm Type)

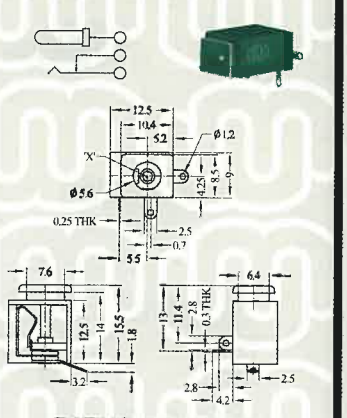

RATING: DC 30V 0.3A

## AS-215(BLACK)

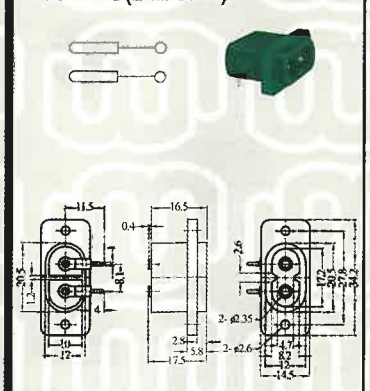

RATING: AC 250V 1A

## DS-025 (ø5.5mm Type)

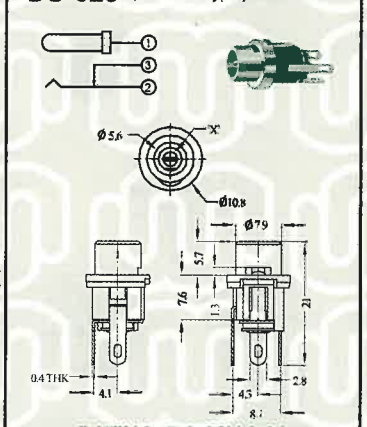

RATING: DC 30V 0.3A

## DS-204

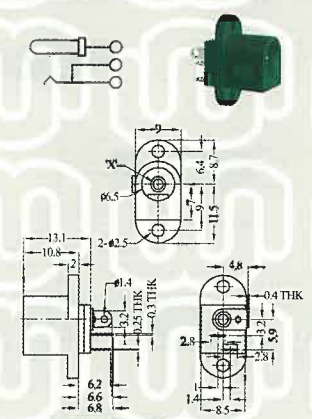

RATING: DC 30V 0.3A

## DS-210

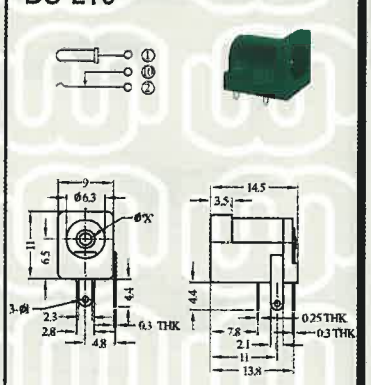

RATING: DC 30V 0.3A



版權所有 翻印必究 ALL RIGHTS RESERVED

# DC Power Jack

## DS-211

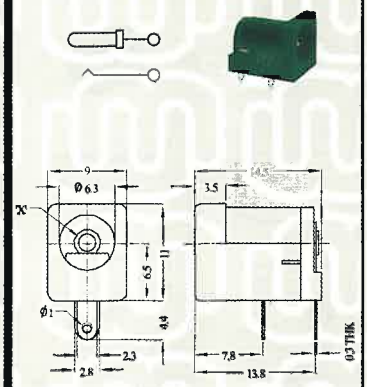

RATING: DC 30V 0.3A

## DS-219 (ø6.5mm Type)

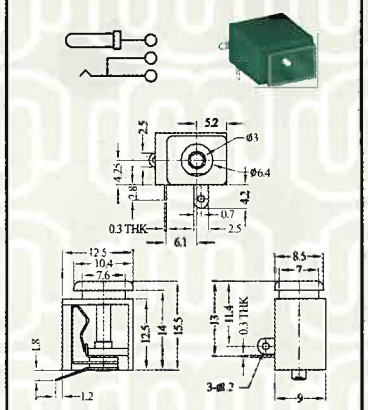

RATING: DC 30V 0.3A

## DS-225

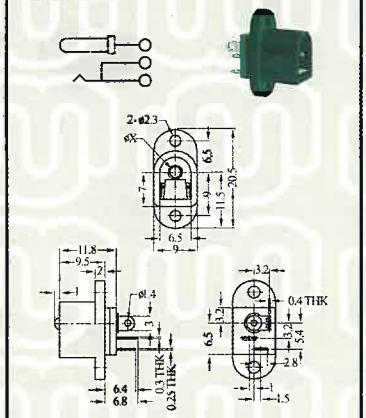

RATING: DC 30V 0.3A

## DS-236

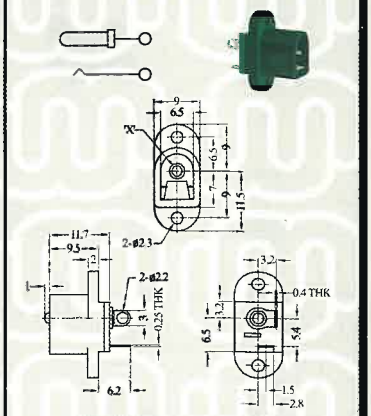

RATING: DC 30V 0.3A

## DS-213 (ø4.0mm Type)

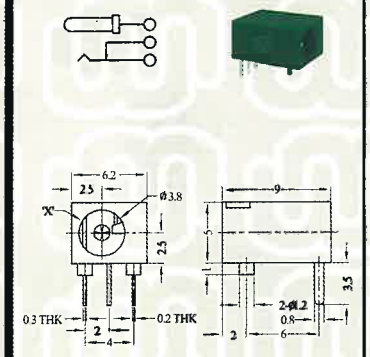

RATING: DC 30V 0.3A

## DS-220

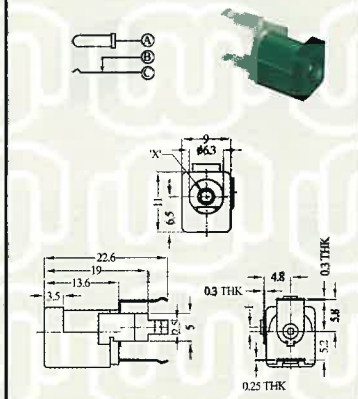

RATING: DC 30V 0.3A

## DS-226

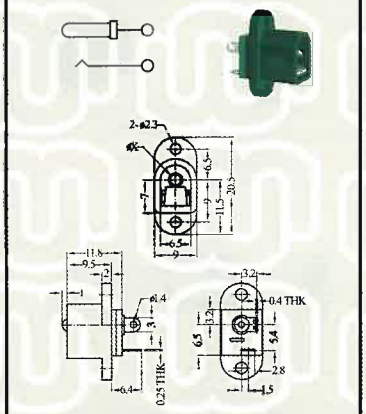

RATING: DC 30V 0.3A

## DS-236B

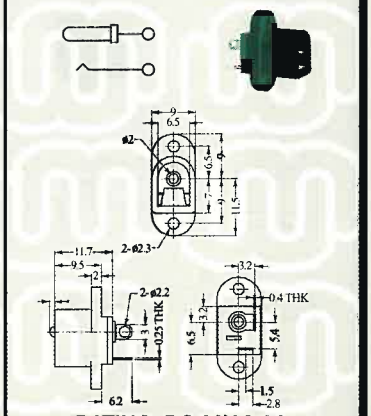

RATING: DC 30V 0.3A

## DS-215

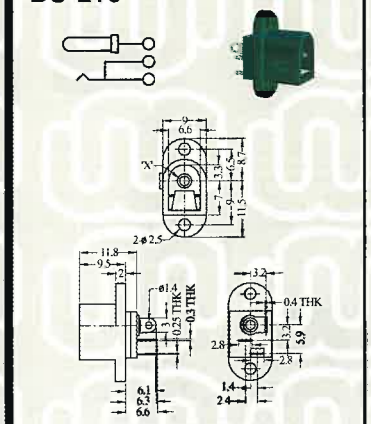

RATING: DC 30V 0.3A

## DS-222 (ø4.3mm Type)

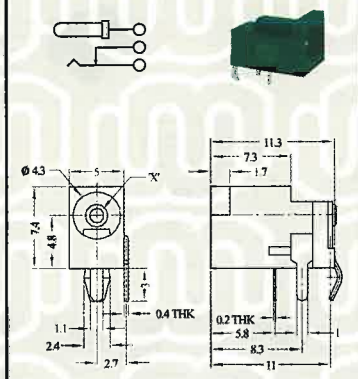

RATING: DC 30V 0.3A

## DS-229 (ø6.5mm Type)

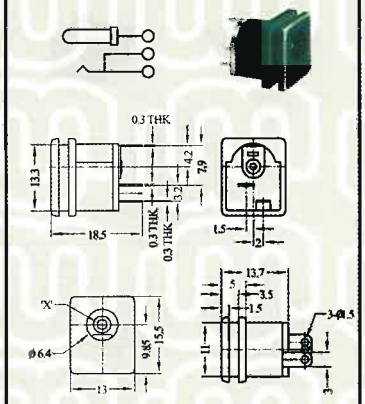

RATING: DC 30V 0.3A

## DS-241

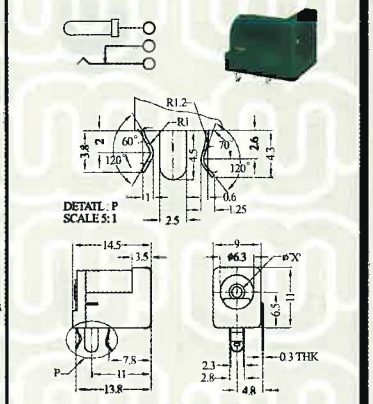

RATING: DC 30V 0.3A

## DS-218 (ø5.5mm Type)

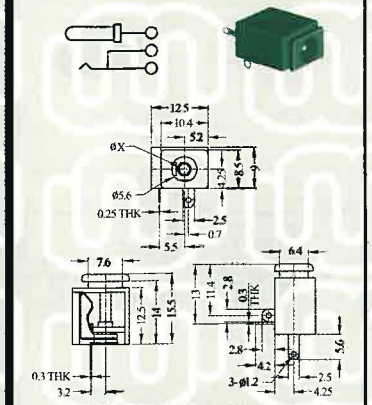

RATING: DC 30V 0.3A

## DS-223

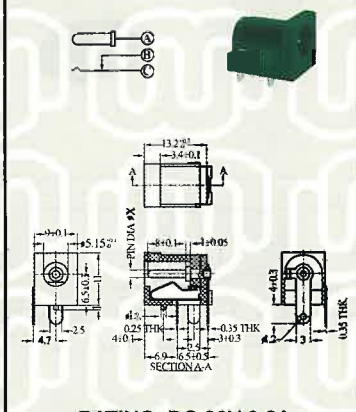

RATING: DC 30V 0.3A

## DS-235

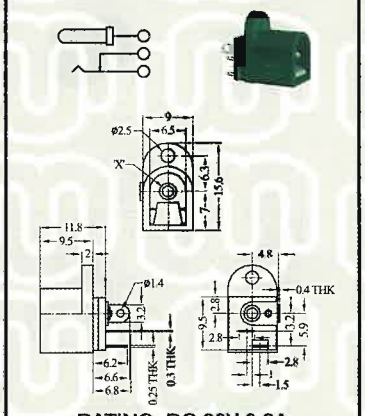

RATING: DC 30V 0.3A

## DS-242

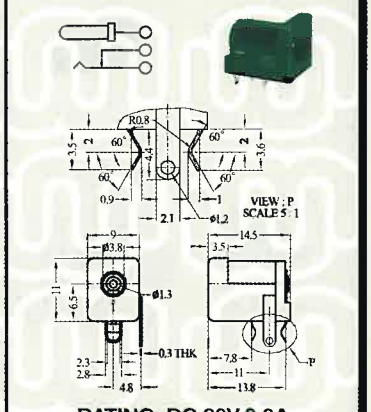

RATING: DC 30V 0.3A



版權所有 翻印必究 ALL RIGHTS RESERVED

# DC Power Jack

## DS-243

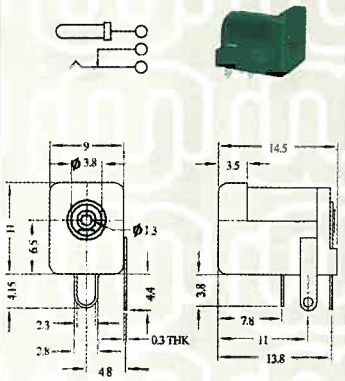

RATING: DC 30V 0.3A

## DS-306

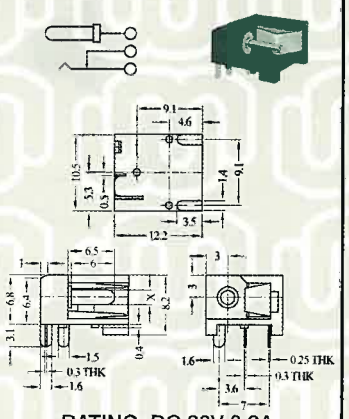

RATING: DC 30V 0.3A

## DS-314 (ø4.5mm Type)

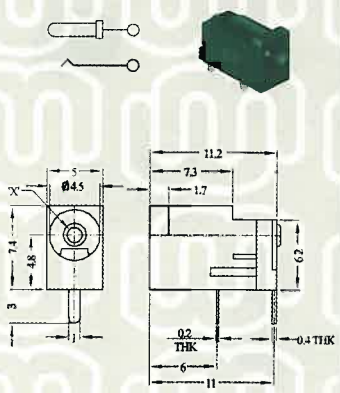

RATING: DC 30V 0.3A

## DS-414 (ø4.5mm Type)

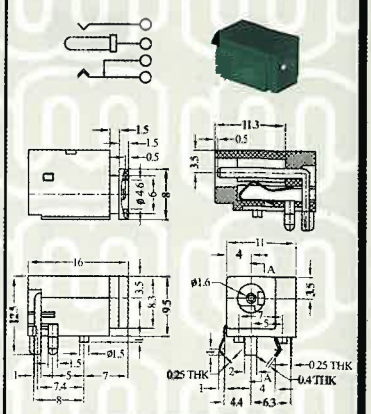

RATING: DC 30V 0.3A

## DS-259A (ø9.5mm Type)

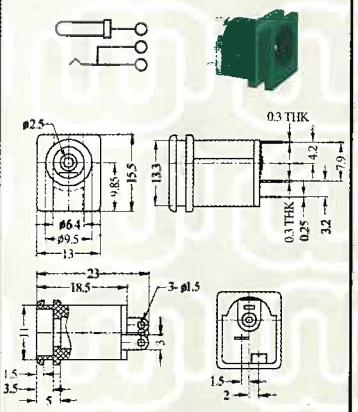

RATING: DC 30V 0.3A

## DS-308 (ø4.5mm Type)

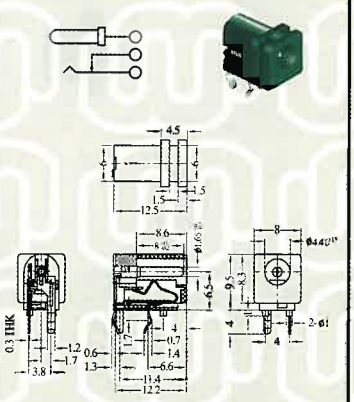

RATING: DC 30V 0.3A

## DS-383 (ø4.0mm Type)

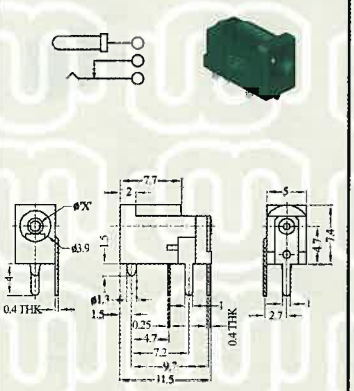

RATING: DC 30V 0.3A

## DS-415 (ø5.0mm Type)

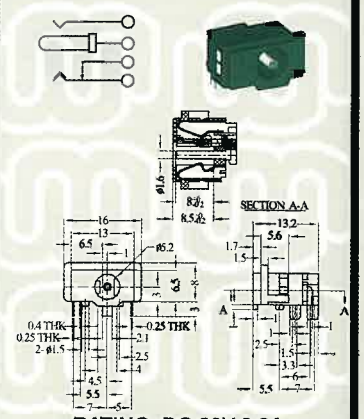

RATING: DC 30V 0.3A

## DS-259B (ø9.5mm Type)

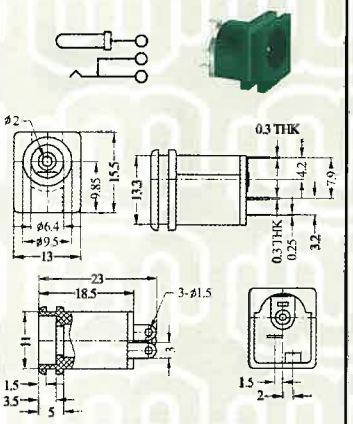

RATING: DC 30V 0.3A

## DS-309 (ø5.5mm Type)

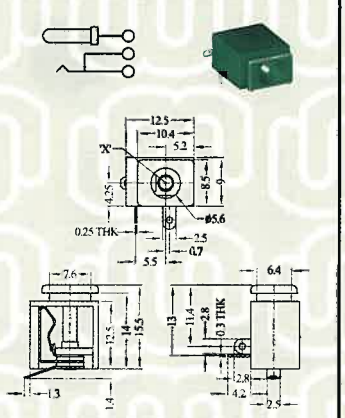

RATING: DC 30V 0.3A

## DS-404

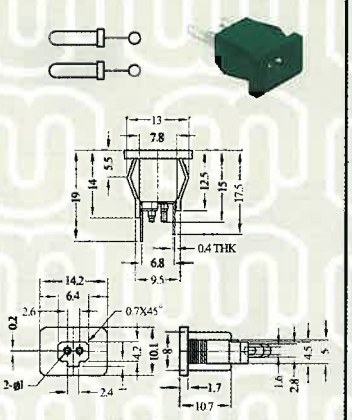

RATING: DC 30V 0.3A

## DS-420 (ø4.0mm Type)

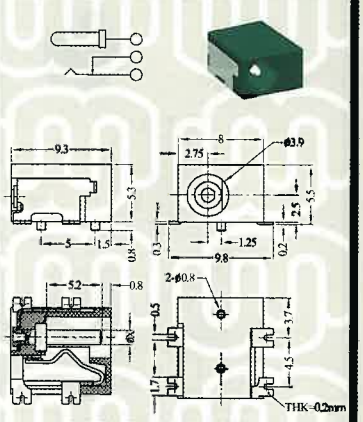

RATING: DC 30V 0.3A

## DS-303

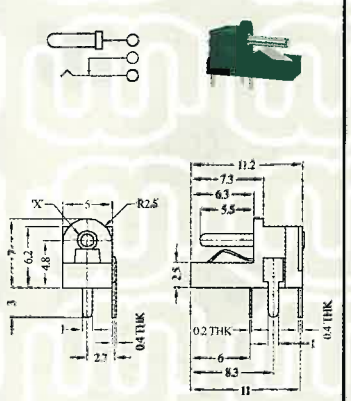

RATING: DC 30V 0.3A

## DS-313 (ø4.5mm Type)

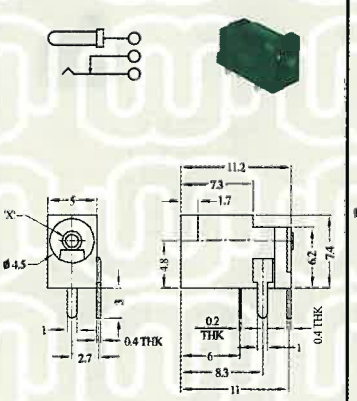

RATING: DC 30V 0.3A

## DS-413 (ø3.5mm Type)

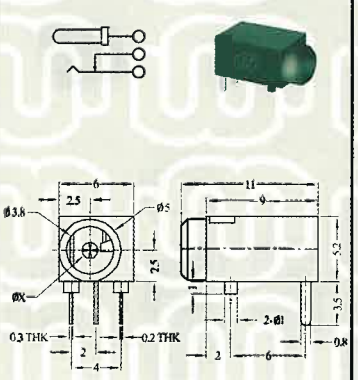

RATING: DC 30V 0.3A

## DS-423 (ø3.0mm Type)

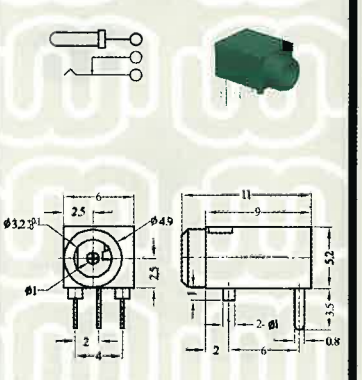

RATING: DC 30V 0.3A



版權所有 翻印必究 ALL RIGHTS RESERVED

# Phone Jack

## DS-613

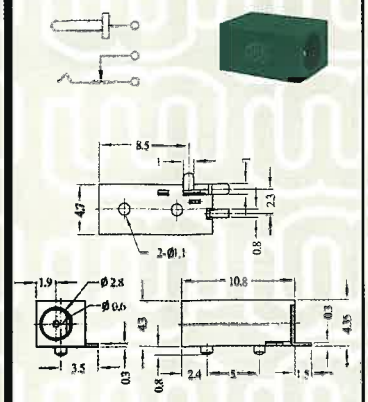

RATING: DC 30V 0.3A

## EY-503NL (ø3.5mm Type)

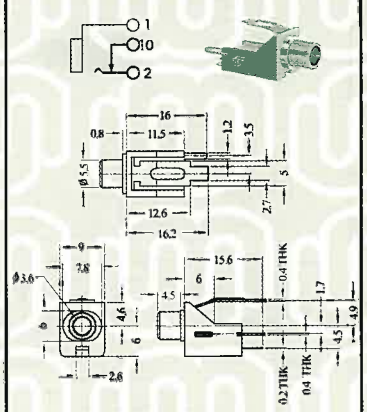

RATING: DC 30V 0.3A

## EY-512CM (ø3.5mm Type)

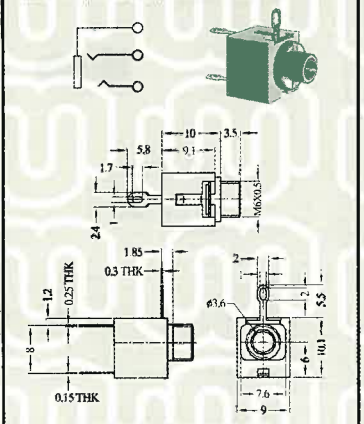

RATING: DC 30V 0.3A

## PY-601N (ø3.5mm Type)

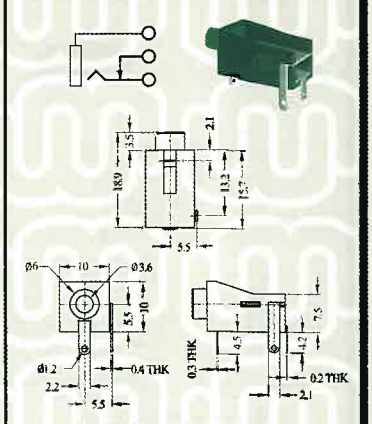

RATING: DC 30V 0.3A

## EY-501CM (ø2.5mm Type)

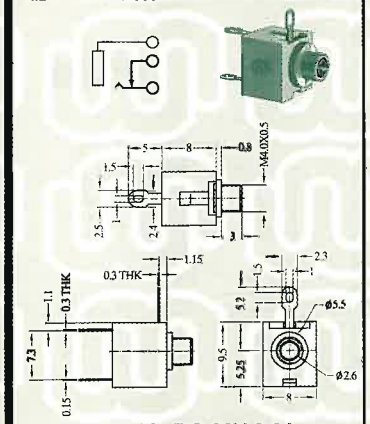

RATING: DC 30V 0.3A

## EY-504NR (ø3.5mm Type)

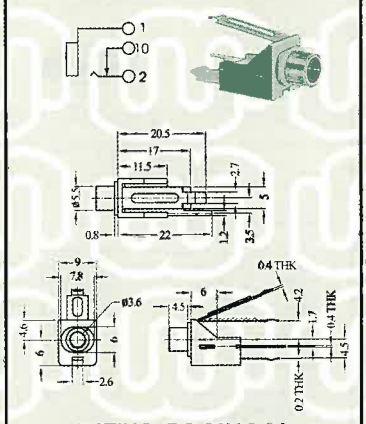

RATING: DC 30V 0.3A

## PY-401C (ø2.5mm Type)

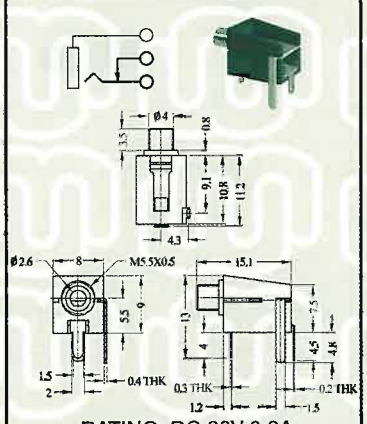

RATING: DC 30V 0.3A

## PY-6401N (ø3.5mm/2.5mm Type)

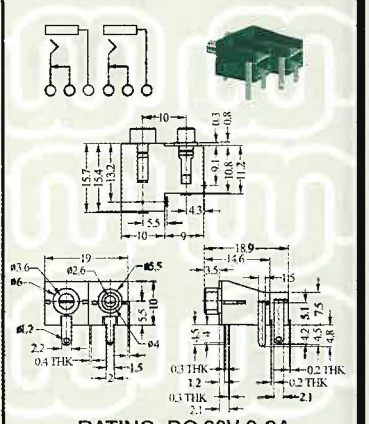

RATING: DC 30V 0.3A

## EY-502CM (ø3.5mm Type)

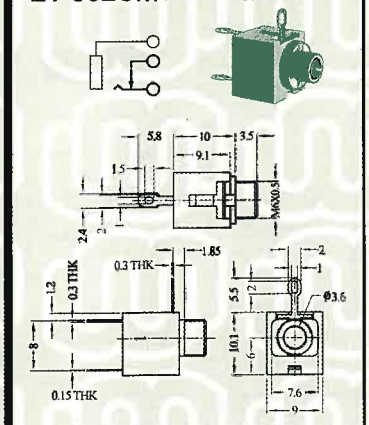

RATING: DC 30V 0.3A

## EY-504NL (ø3.5mm Type)

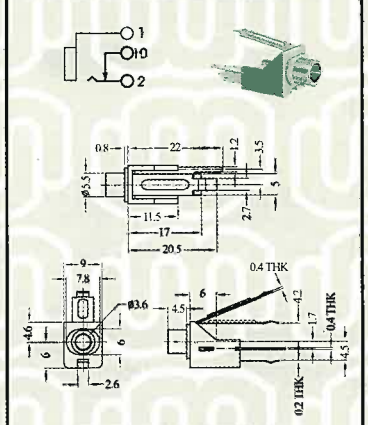

RATING: DC 30V 0.3A

## PY-401N (ø2.5mm Type)

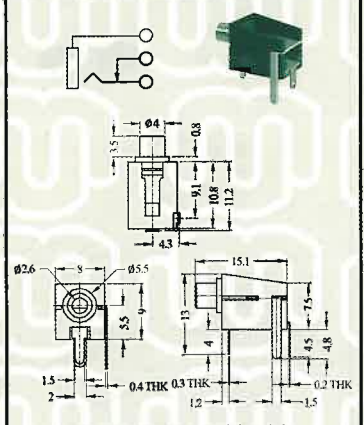

RATING: DC 30V 0.3A

## PY-6401C (ø3.5mm/2.5mm Type)

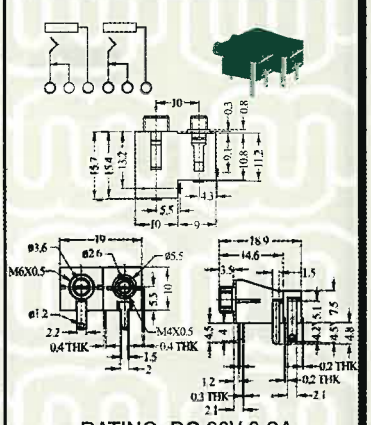

RATING: DC 30V 0.3A

## EY-503NR (ø3.5mm Type)

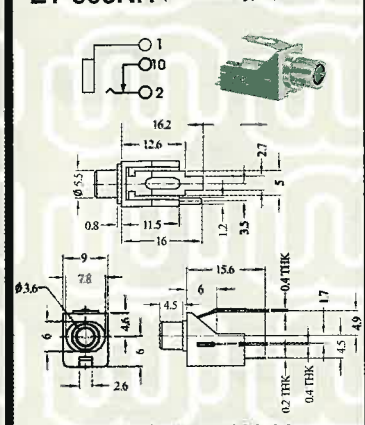

RATING: DC 30V 0.3A

## EY-506C (ø2.5mm Type)

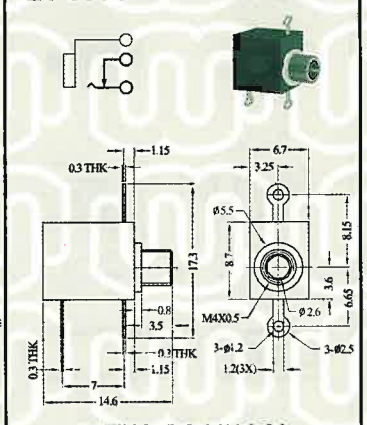

RATING: DC 30V 0.3A

## PY-601C (ø3.5mm Type)

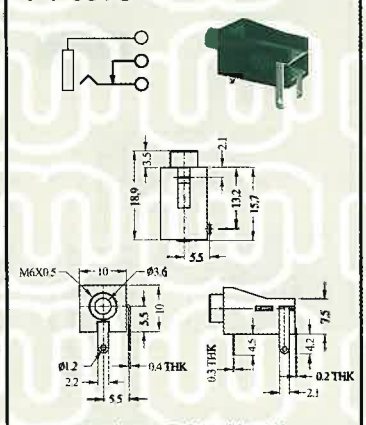

RATING: DC 30V 0.3A



版權所有 翻印必究 ALL RIGHTS RESERVED

# Phone Jack

## ST-001 (ø3.5mm Type)

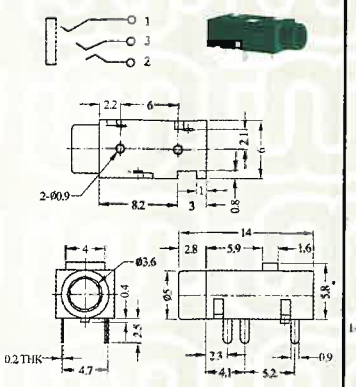

RATING: DC 30V 0.3A

## ST-005 (ø3.5mm Type)

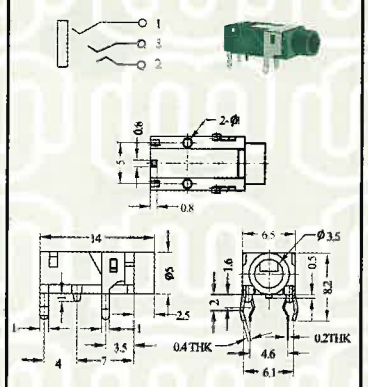

RATING: DC 30V 0.3A

## ST-010 (ø3.5mm Type)

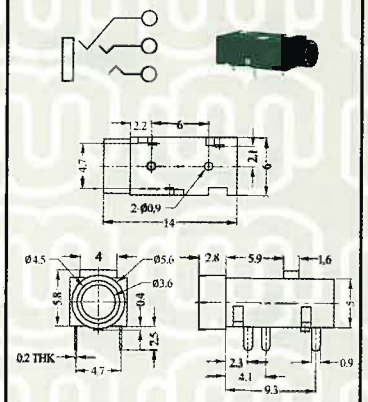

RATING: DC 30V 0.3A

## ST-014

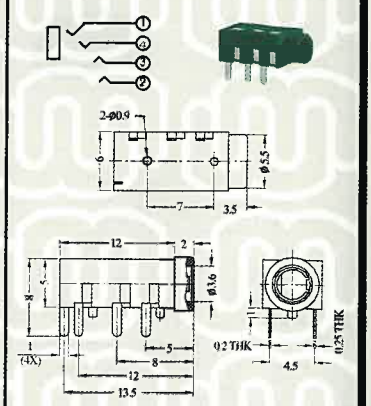

RATING: DC 30V 0.3A

## ST-002 (ø2.5mm Type)

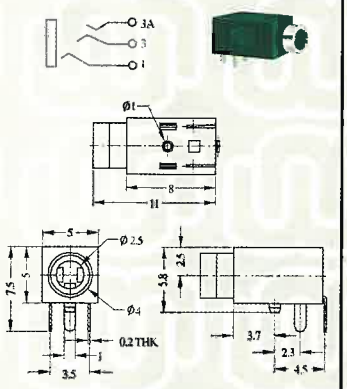

RATING: DC 30V 0.3A

## ST-006 (ø3.5mm Type)

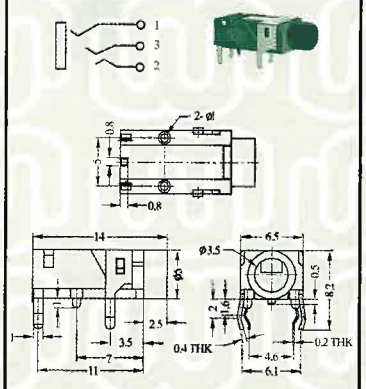

RATING: DC 30V 0.3A

## ST-011 (ø3.5mm Type)

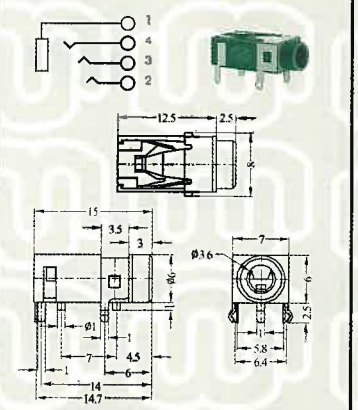

RATING: DC 30V 0.3A

## ST-019 (ø3.5mm Type)

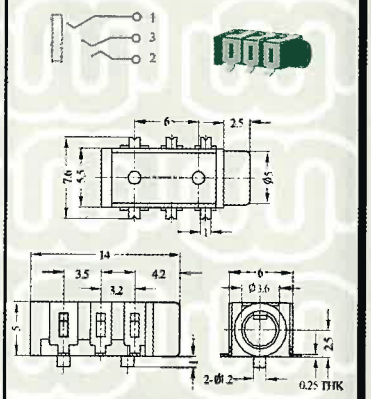

RATING: DC 30V 0.3A

## ST-003 (ø2.5mm Type)

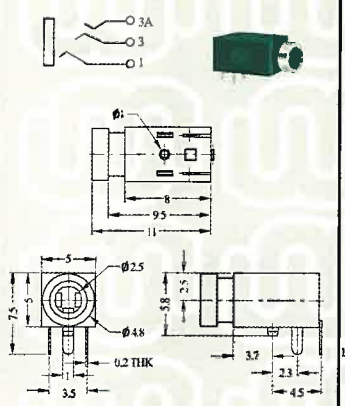

RATING: DC 30V 0.3A

## ST-007 (ø3.5mm Type)

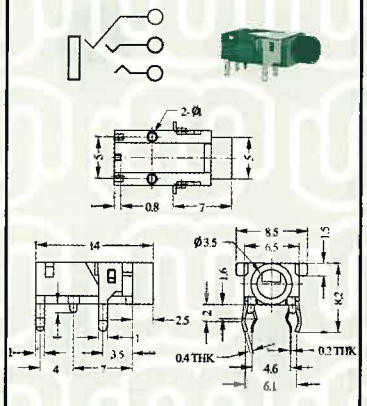

RATING: DC 30V 0.3A

## ST-012 (ø3.5mm Type)

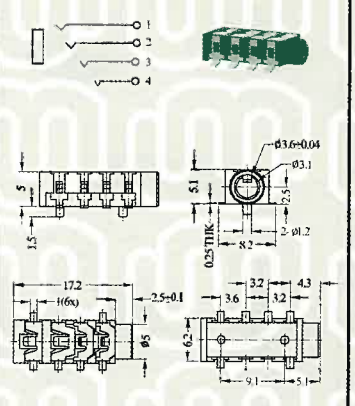

RATING: DC 30V 0.3A

## ST-025 (ø3.5mm Type)

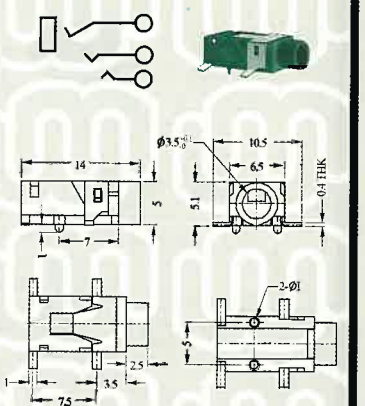

RATING: DC 30V 0.3A

## ST-004 (ø3.5mm Type)

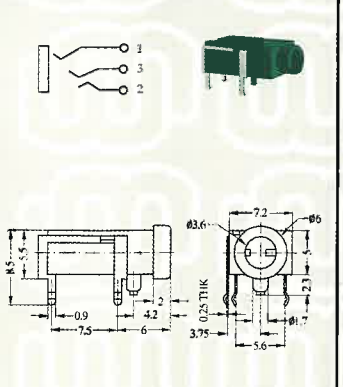

RATING: DC 30V 0.3A

## ST-009 (ø3.5mm Type)

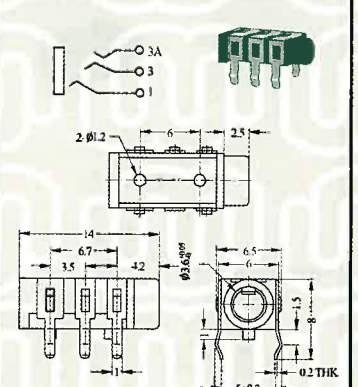

RATING: DC 30V 0.3A

## ST-013 (ø3.5mm Type)

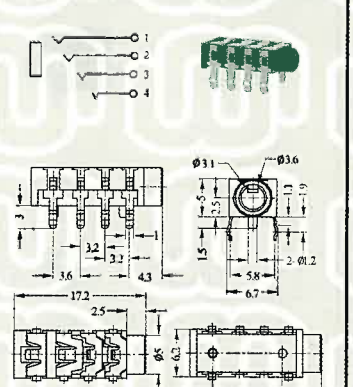

RATING: DC 30V 0.3A

## ST-101-06 (ø2.5mm Type)

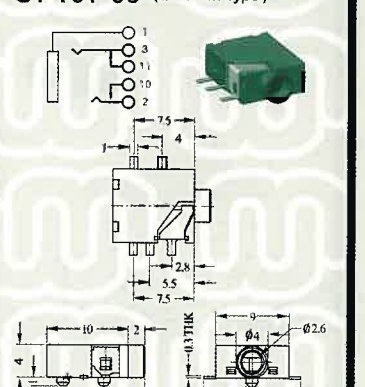

RATING: DC 30V 0.3A



版權所有 翻印必究 ALL RIGHTS RESERVED

# Phone Jack

## ST-102A-06 (ø2.5mm Type)

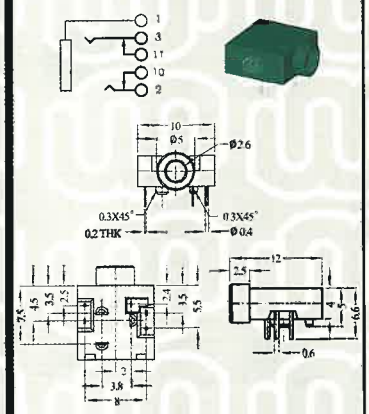

RATING: DC 30V 0.3A

## ST-102-06 (ø2.5mm Type)

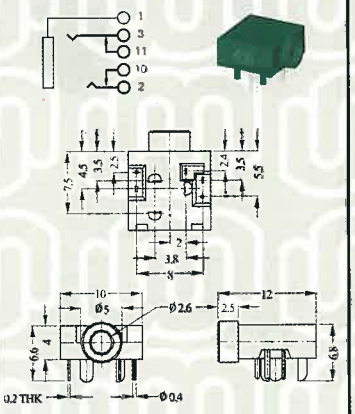

RATING: DC 30V 0.3A

## ST-105 (ø2.5mm Type)

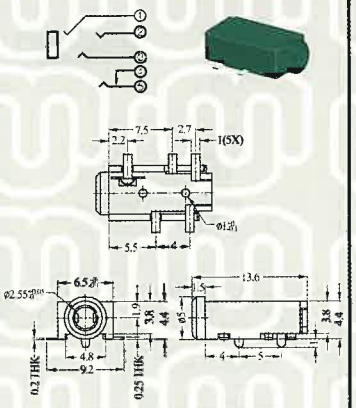

RATING: DC 30V 0.3A

## ST-200 (ø2.5mm Type)

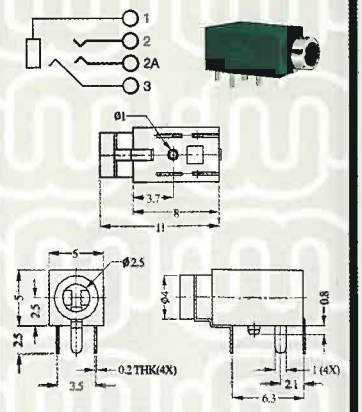

RATING: DC 30V 0.3A

## ST-102B-06 (ø2.5mm Type)

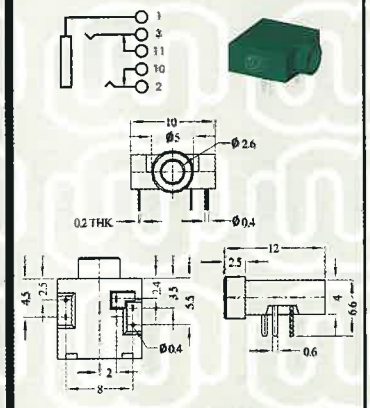

RATING: DC 30V 0.3A

## ST-103-06 (ø2.5mm Type)

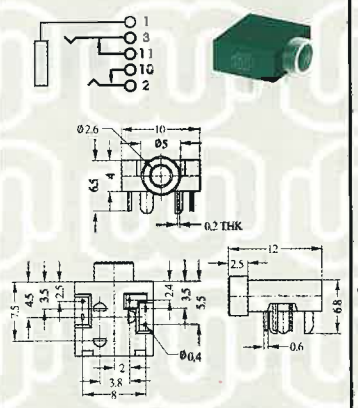

RATING: DC 30V 0.3A

## ST-106 (ø2.5mm Type)

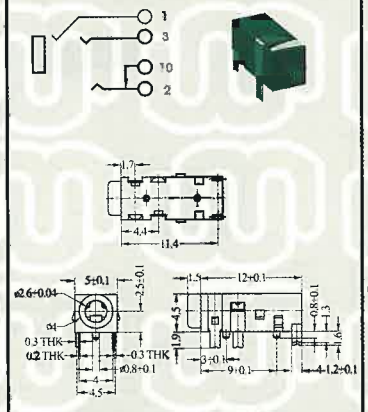

RATING: DC 30V 0.3A

## ST-202 (ø2.5mm Type)

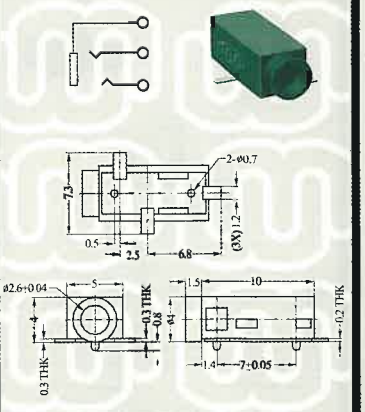

RATING: DC 16V 0.3A

## ST-102C-06 (ø2.5mm Type)

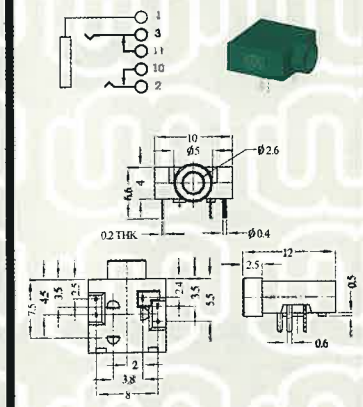

RATING: DC 30V 0.3A

## ST-103C-06 (ø2.5mm Type)

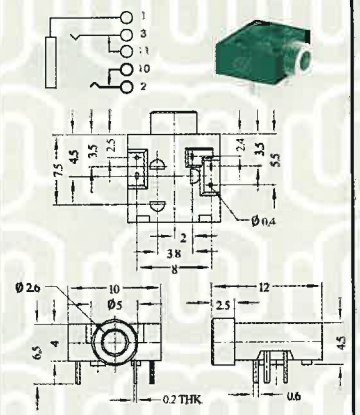

RATING: DC 30V 0.3A

## ST-171-01~04 (ø3.5/2.5mm Type)

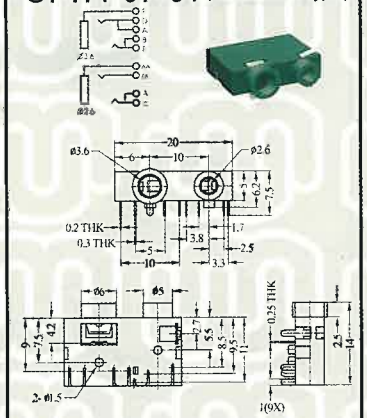

RATING: DC 30V 0.3A

## ST-212-06 (ø3.5mm Type)

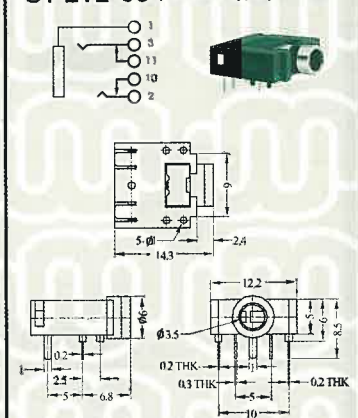

RATING: DC 30V 0.3A

## ST-102-05 (ø2.5mm Type)

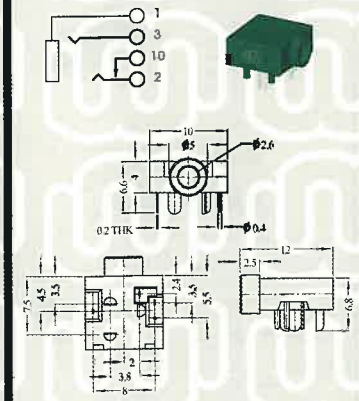

RATING: DC 30V 0.3A

## ST-104 (ø2.5mm Type)

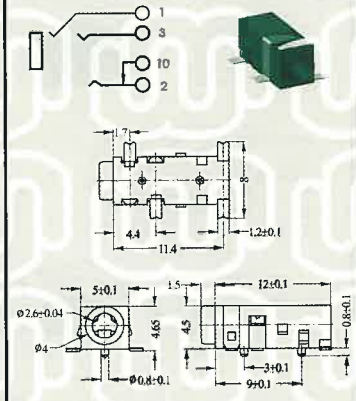

RATING: DC 30V 0.3A

## ST-109

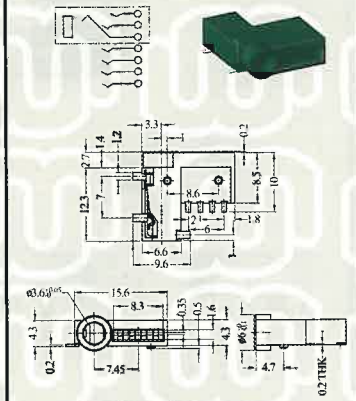

RATING: DC 30V 0.3A

## ST-215 (ø3.5mm Type)

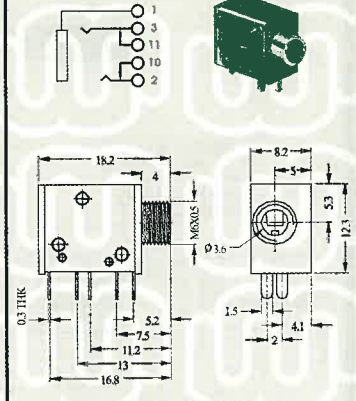

RATING: DC 30V 0.3A



版權所有 翻印必究 ALL RIGHTS RESERVED

# Phone Jack

## ST-217-06 (ø3.5mm Type)

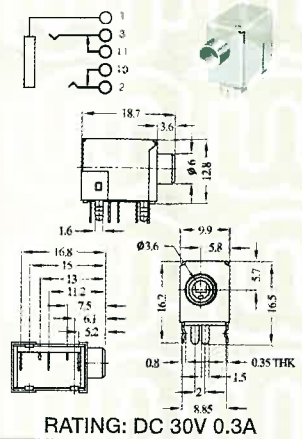

RATING: DC 30V 0.3A

## ST-212-SW22D01 (N)

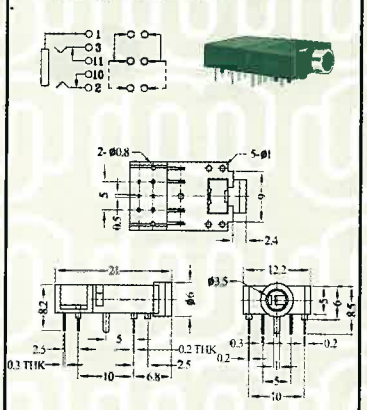

RATING: DC 30V 0.3A

## ST-225-06 (ø3.5mm Type)

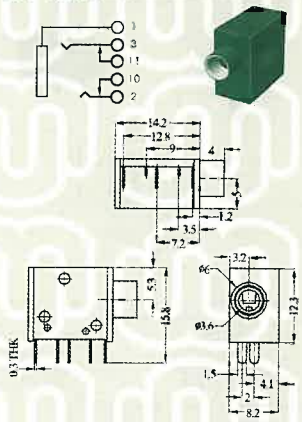

RATING: DC 30V 0.3A

## ST-309

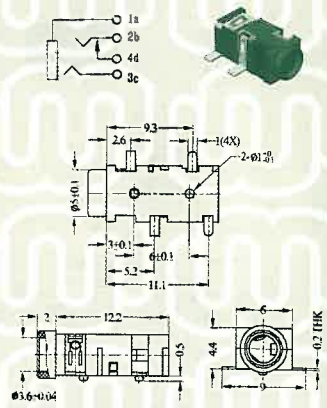

RATING: DC 12V 1A

## ST-222-06 (ø3.5mm Type)

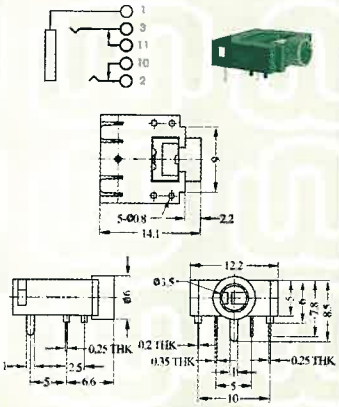

RATING: DC 30V 0.3A

## ST-222-SW12D01 (N)

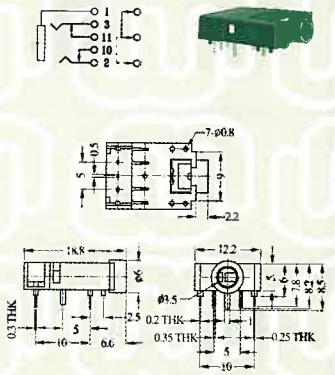

RATING: DC 30V 0.3A

## ST-301 (ø3.5mm Type)

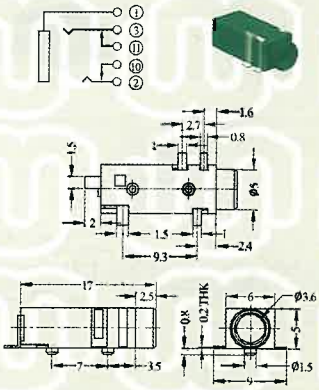

RATING: DC 12V 1A

## ST-320

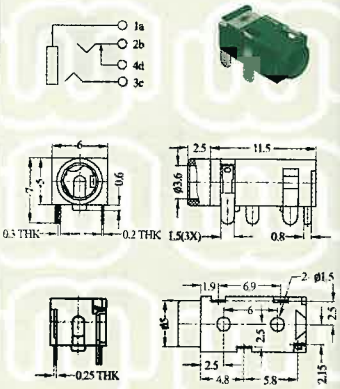

RATING: DC 30V 0.3A

## ST-223-06 (ø3.5mm Type)

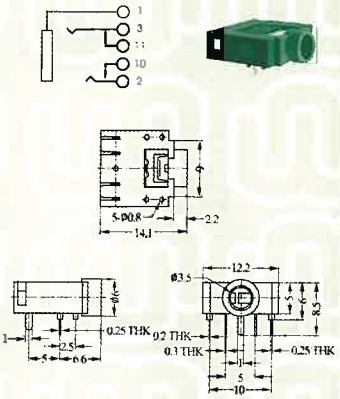

RATING: DC 30V 0.3A

## ST-222-SW22D01 (N)

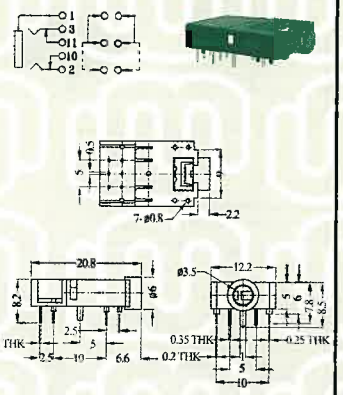

RATING: DC 30V 0.3A

## ST-303 (ø2.5mm Type)

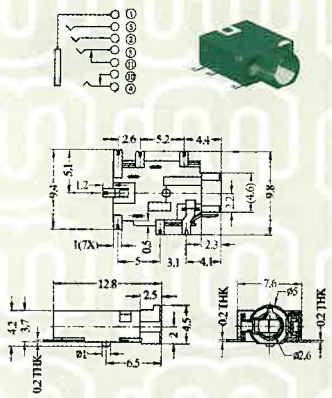

RATING: DC 16V 0.3A

## ST-401

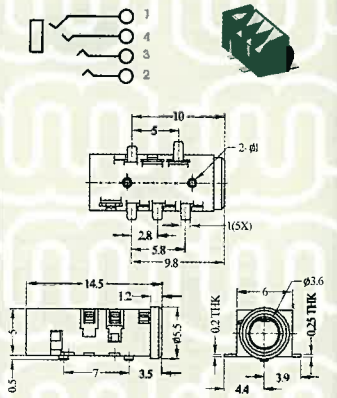

RATING: DC 30V 0.3A

## ST-212-SW12D01 (N)

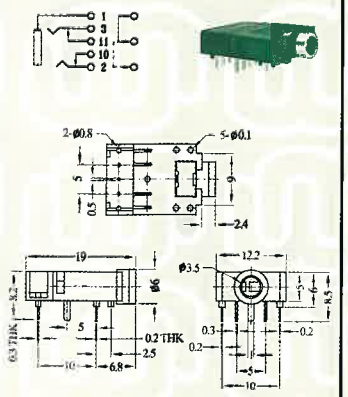

RATING: DC 30V 0.3A

## ST-214C-06/ST-214N-06 (ø3.5mm Type)

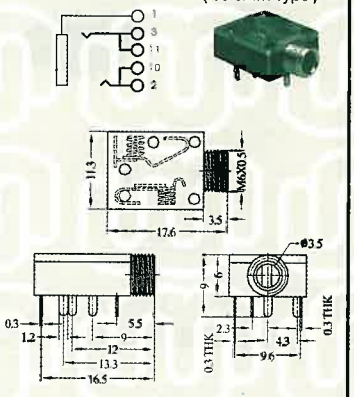

RATING: DC 30V 0.3A

## ST-304 (ø2.5mm Type) (N)

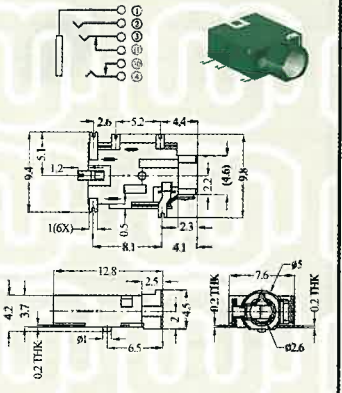

RATING: DC 16V 0.3A

## ST-409

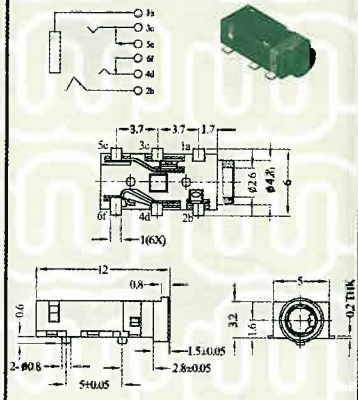

RATING: DC 16V 0.3A




版權所有 翻印必究 ALL RIGHTS RESERVED

# Phone Jack

## ST-410

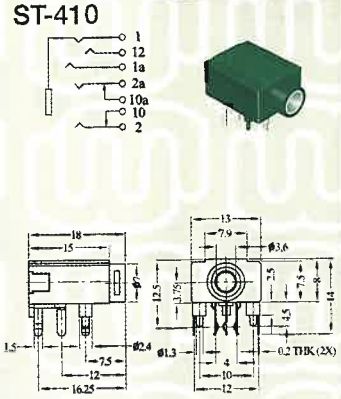

RATING: DC 30V 0.3A

## ST-413-02W (ø3.5mm Type)

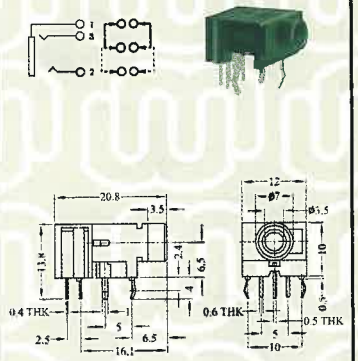

RATING: DC 30V 0.3A

## ST-623 (ø3.5mm Type)

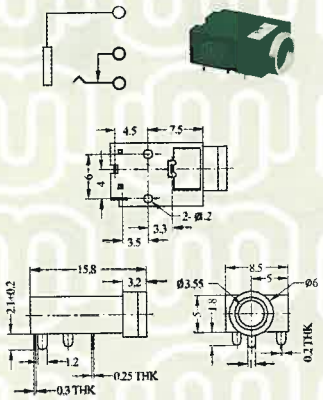

RATING: DC 30V 0.3A

## MJ-091 (6.5mm Type)

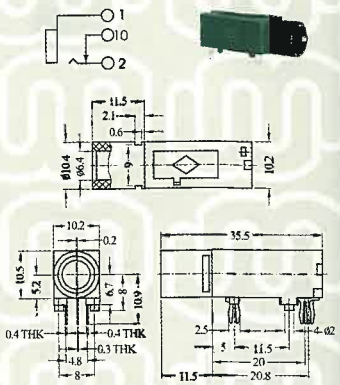

RATING: DC 30V 0.3A

## ST-412-C (ø3.5mm Type)

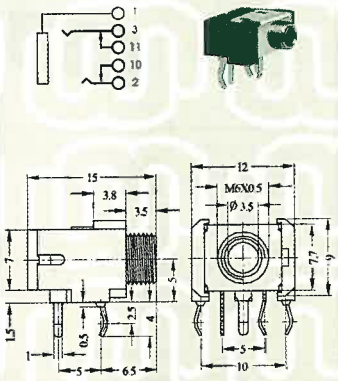

RATING: DC 30V 0.3A

## ST-416-06 (ø3.5mm Type)

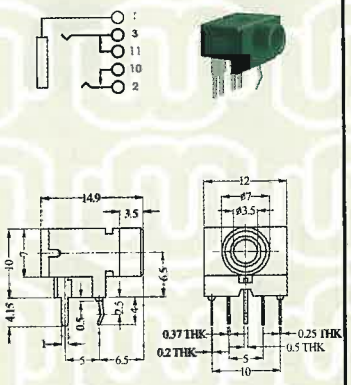

RATING: DC 30V 0.3A

## MJ-062 (ø6.5mm Type)

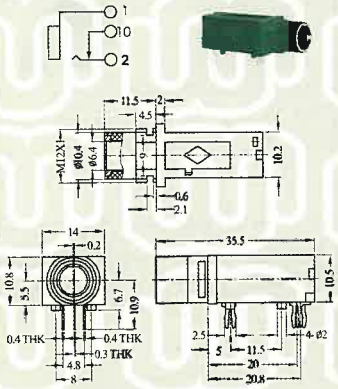

RATING: DC 30V 0.3A

## MJ-078

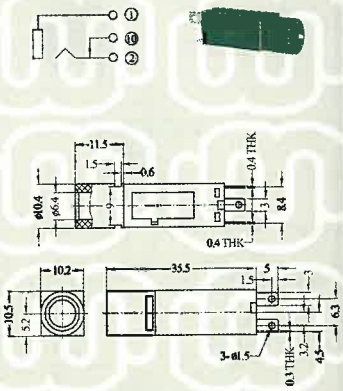

RATING: DC 30V 0.3A

## ST-413-06 (ø3.5mm Type)

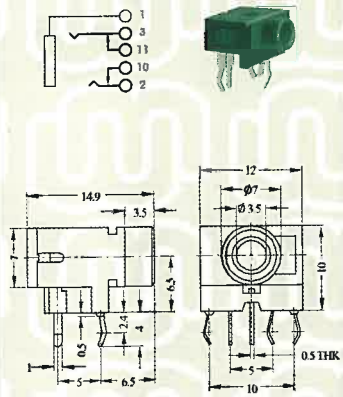

RATING: DC 30V 0.3A

## ST-603 (ø3.5mm Type)

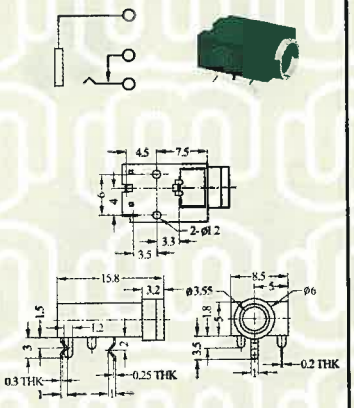

RATING: DC 30V 0.3A

## MJ-068 (6.5mm Type)

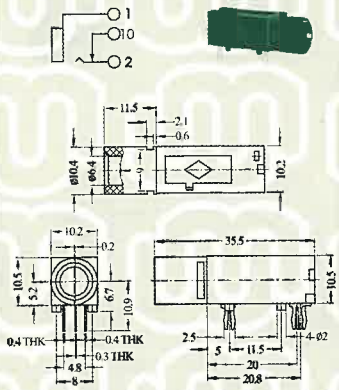

RATING: DC 30V 0.3A

## MJ-093

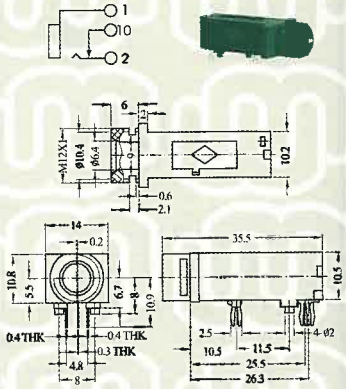

RATING: DC 30V 0.3A

## ST-413-06W (ø3.5mm Type) (N)

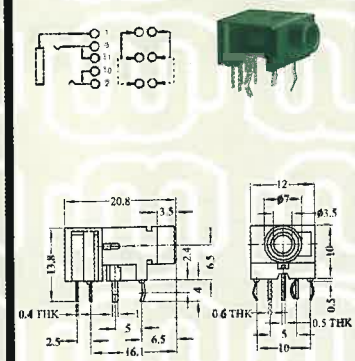

RATING: DC 30V 0.3A

## ST-613 (ø3.5mm Type)

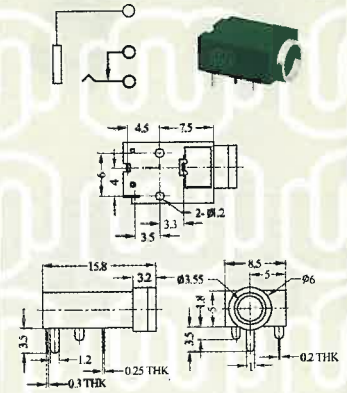

RATING: DC 30V 0.3A

## MJ-069 (6.5mm Type)

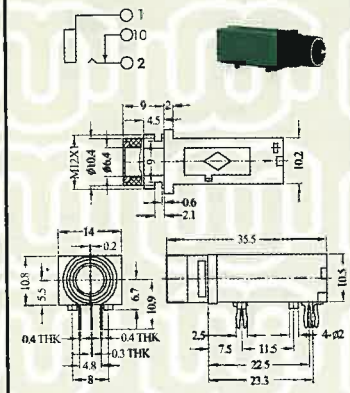

RATING: DC 30V 0.3A

(S) SHORTING (N) NON-SHORTING



版權所有 翻印必究 ALL RIGHTS RESERVED

# RCA Jack

## RC-101

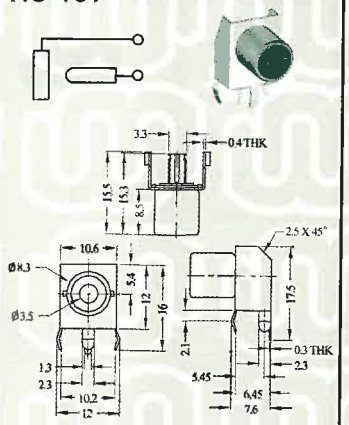

RATING: DC 30V 0.3A

## RC-125

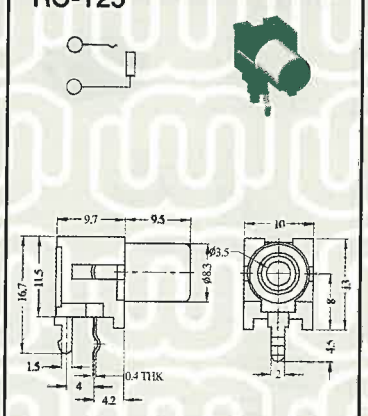

RATING: DC 30V 0.3A

## RC-140

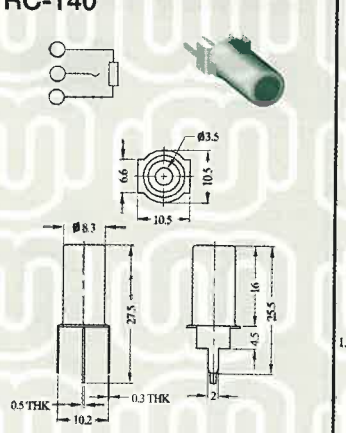

RATING: DC 30V 0.3A

## RC-155

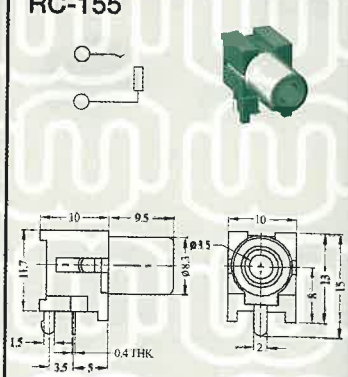

RATING: DC 30V 0.3A

## RC-103

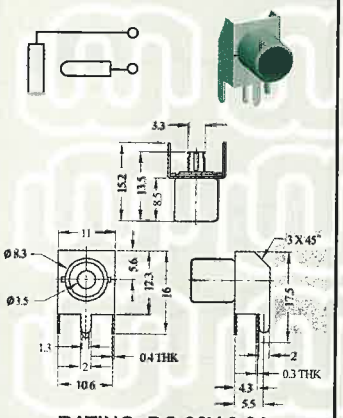

RATING: DC 30V 0.3A

## RC-127

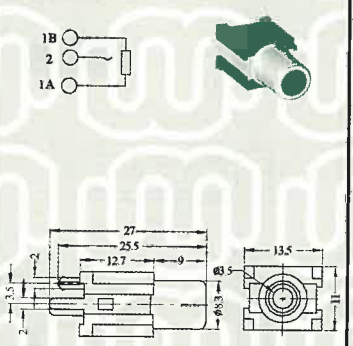

RATING: DC 30V 0.3A

## RC-141

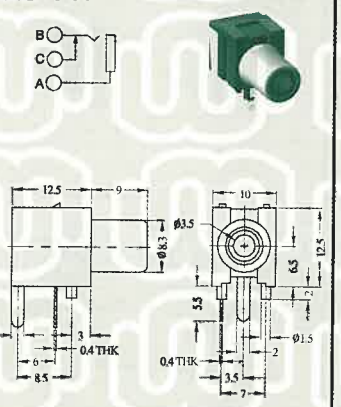

RATING: DC 30V 0.3A

## RC-248

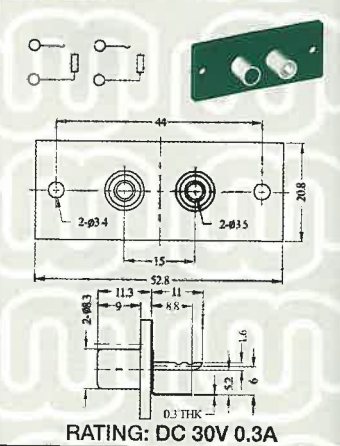

RATING: DC 30V 0.3A

## RC-104

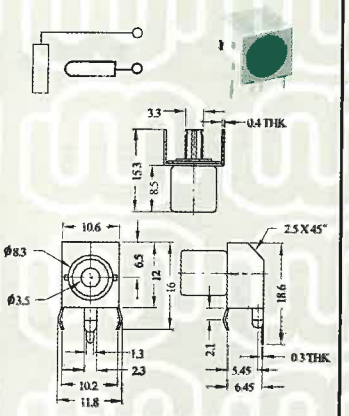

RATING: DC 30V 0.3A

## RC-129

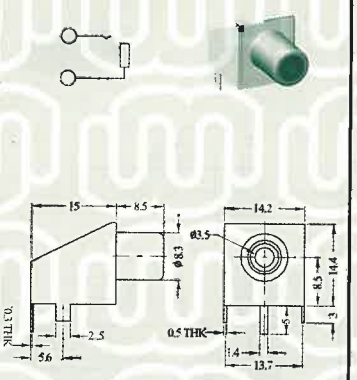

RATING: DC 30V 0.3A

## RC-142

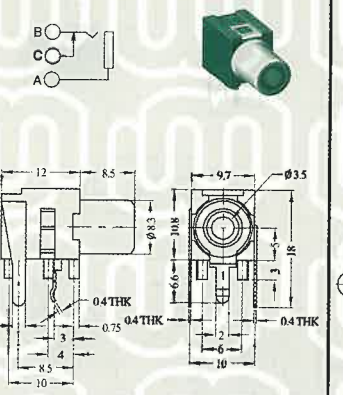

RATING: DC 30V 0.3A

## RC-216BB

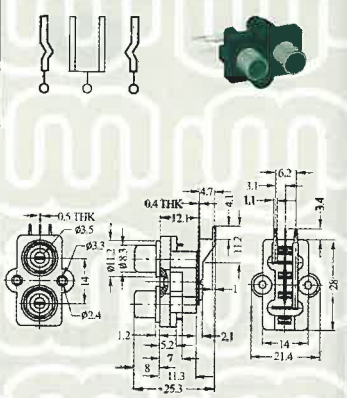

RATING: DC 30V 0.3A

## RC-106

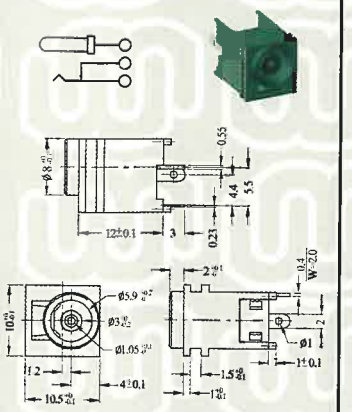

RATING: DC 30V 0.3A

## RC-139

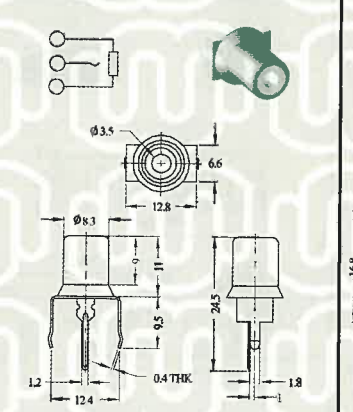

RATING: DC 30V 0.3A

## RC-145

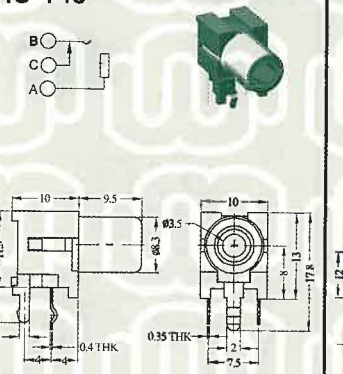

RATING: DC 30V 0.3A

## RC-325

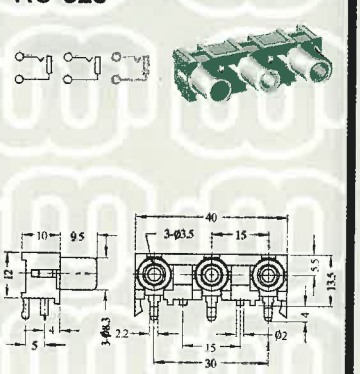

RATING: DC 30V 0.3A



版權所有 翻印必究 ALL RIGHTS RESERVED

# Audio Plug / RCA Jack

## RC-331

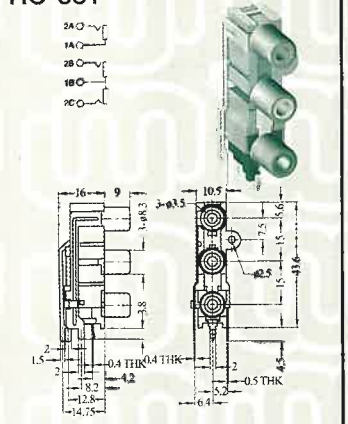

RATING: DC 30V 0.3A

## RC-434

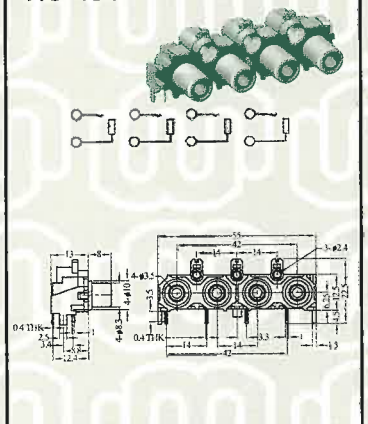

RATING: DC 30V 0.3A

## CS-105

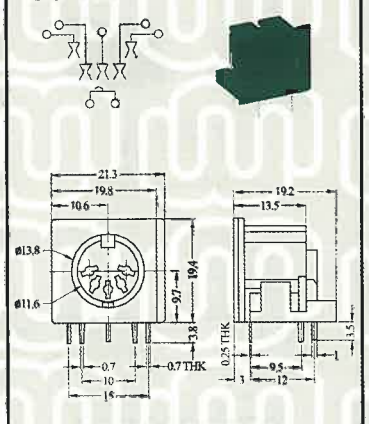

RATING: DC 30V 0.3A

## MP-642

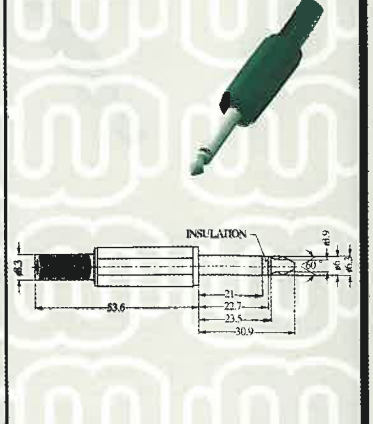


## RC-333

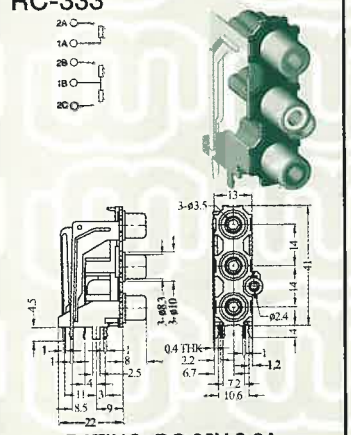

RATING: DC 30V 0.3A

## RC-622

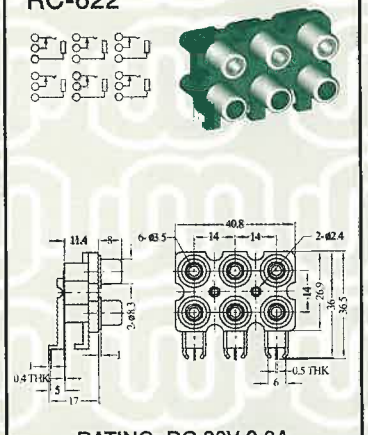

RATING: DC 30V 0.3A

## MP-252

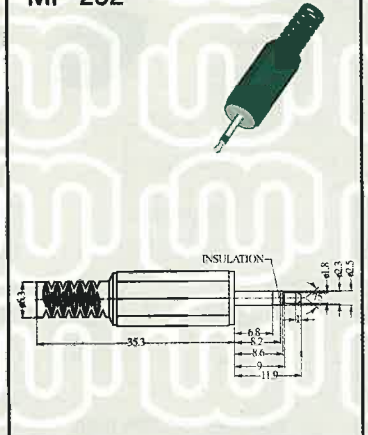


## MP-643

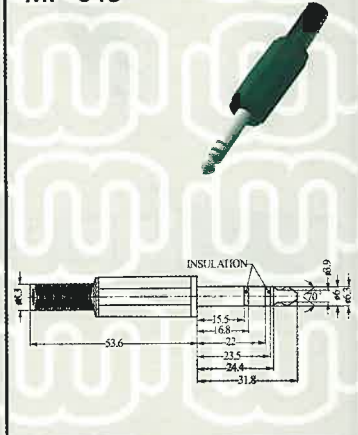


## RC-339

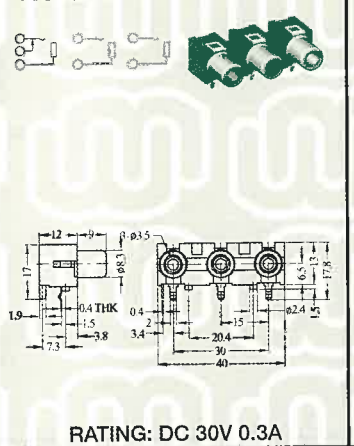

RATING: DC 30V 0.3A

## RC-833

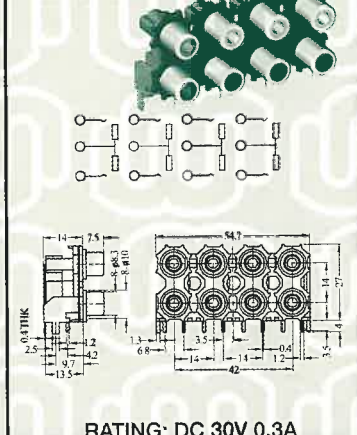

RATING: DC 30V 0.3A

## MP-352

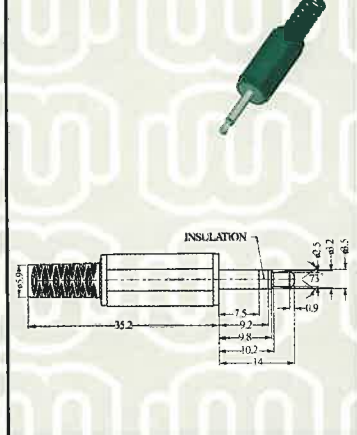


## DP-5520-S

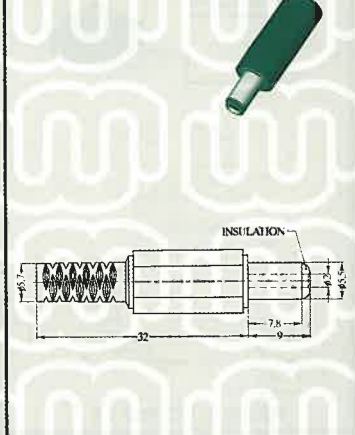


## RC-429

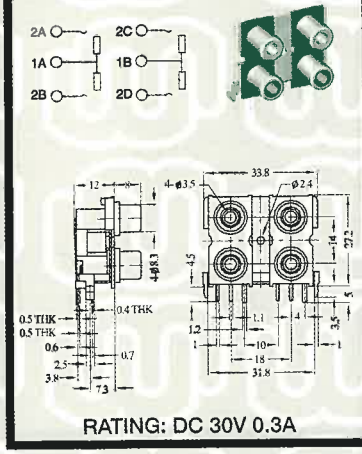

RATING: DC 30V 0.3A

## CS-104

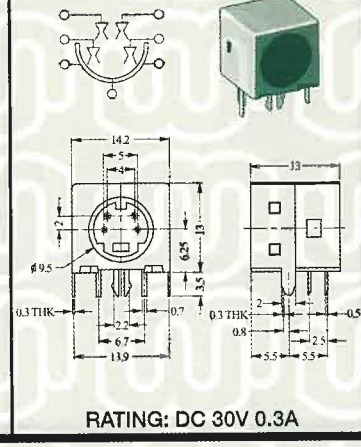

RATING: DC 30V 0.3A

## MP-353

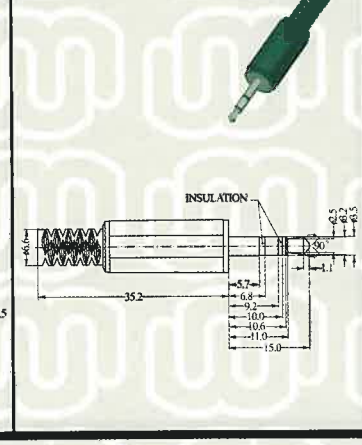


## DP-5520-L

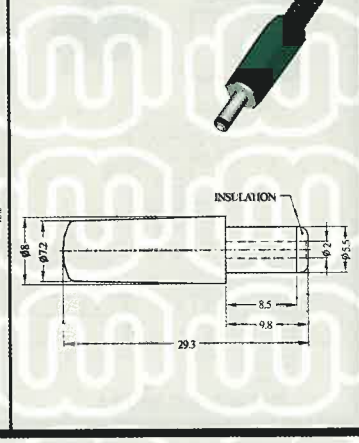




版權所有 翻印必究 ALL RIGHTS RESERVED

# Audio Plug

## DP-5525-M

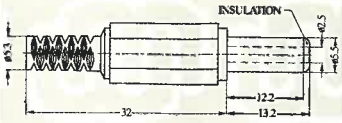


## DS-248

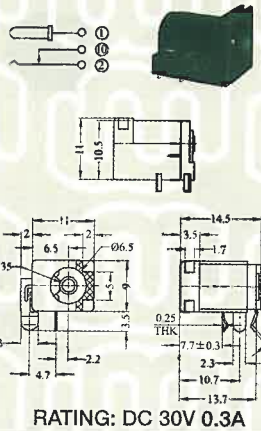


RATING: DC 30V 0.3A

## RP-321

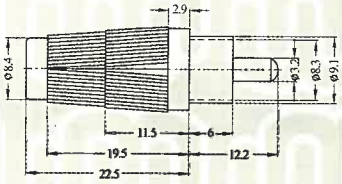


## ST-331

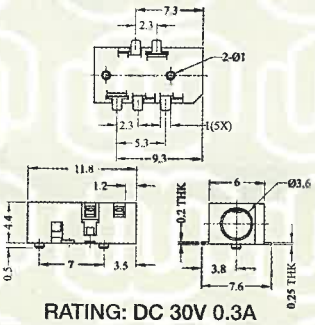


RATING: DC 30V 0.3A

## PB-11D06

CIRCUIT DIAGRAM

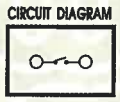

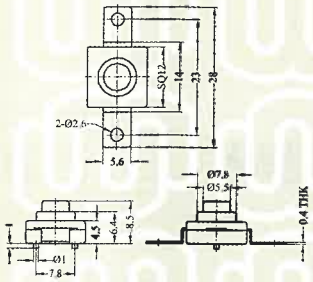


RATING: DC 30V 1A

## PB-11D14

CIRCUIT DIAGRAM

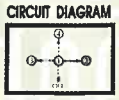

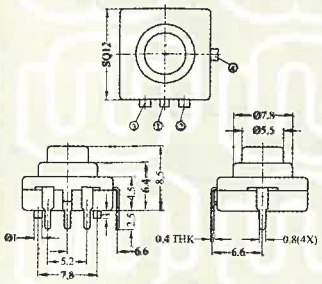


RATING: DC 30V 1A



版權所有 翻印必究 ALL RIGHTS RESERVED

# CHASSIS UNIT FOR - PBS H SERIES

| NO. OF KEY / PITCH(MM) | 1 | 2 | 3 | 4 | 5 | 6 | 7 | 8 | 9 | 10 |
|---|---|---|---|---|---|---|---|---|---|---|
| 10mm | | 36 | 46 | | 66 | 76 | 86 | | | |
| 12.5mm | | | 51 | 63.5 | 76 | 88.5 | 101 | | | |
| 15mm | | 41 | 56 | 71 | 86 | 101 | 116 | 131 | | 161 |
| 17.5mm | | | 61 | 78.5 | 96 | 113.5 | | | 166 | |
| 20mm | 26 | 46 | 66 | 86 | 106 | 126 | | | | |
| 40mm | | | | | 186 | | | | | |

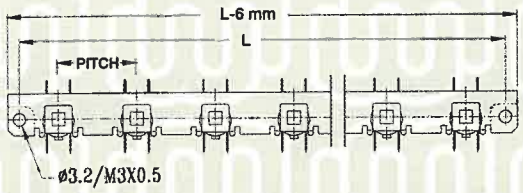


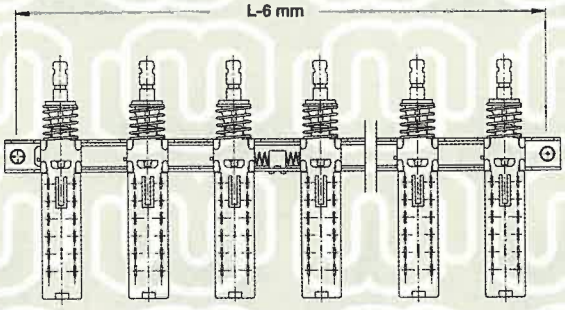


## TERMINALS TYPE FOR PBS22H01 , PBS42H01 , PBS62H01

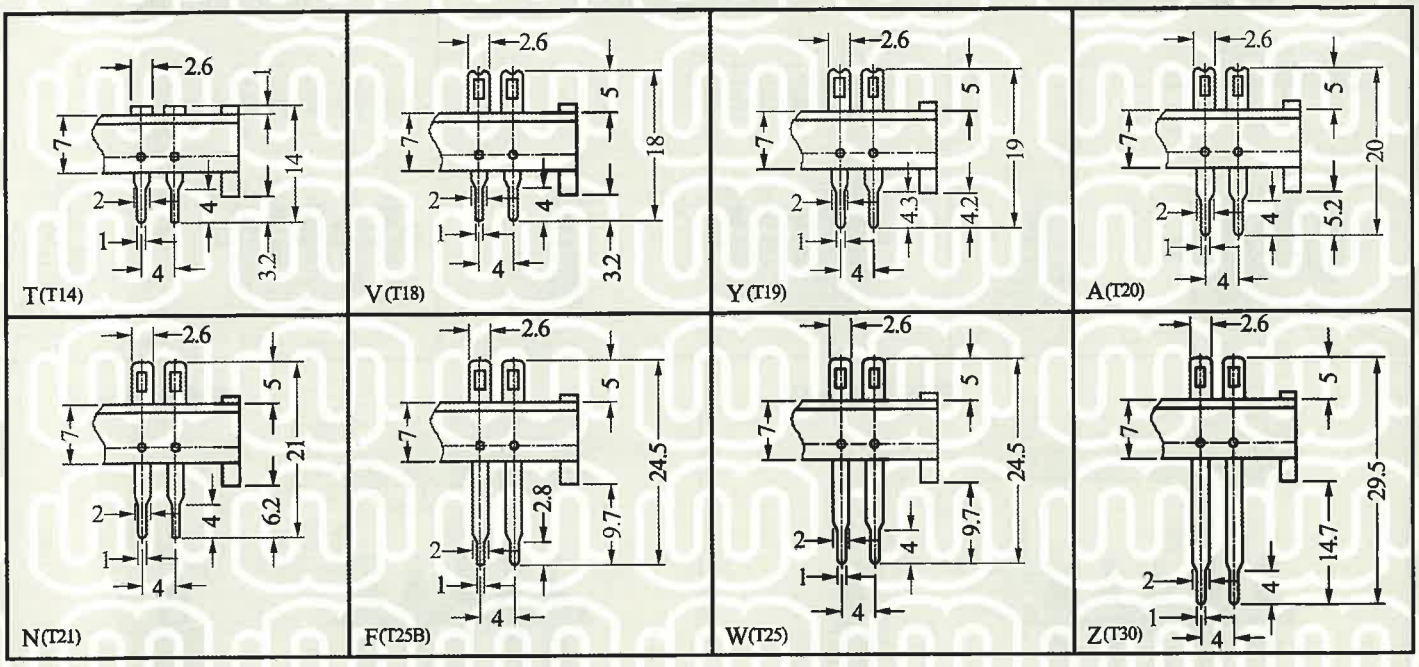




版權所有 翻印必究 ALL RIGHTS RESERVED

# PBS Series Push Switch

## PBS-2-SA2-MV

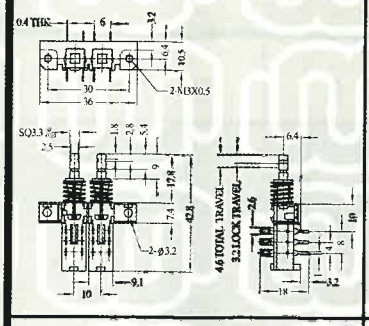


## PBS-2-IB2-HV

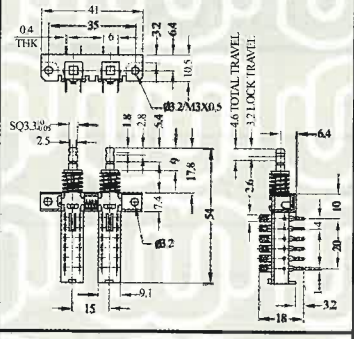


## PBS-2-IB2-KV

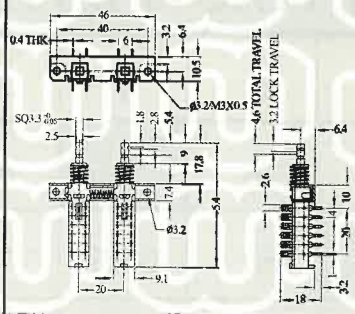


## PBS-3-IA3-MV

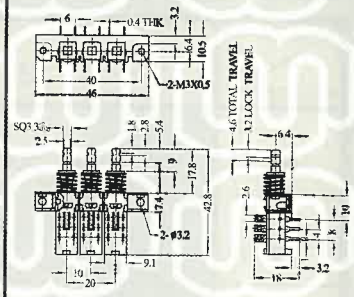


## PBS-3-IB3-GV

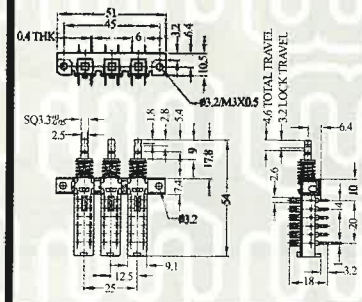


## PBS-3-IB3-HV

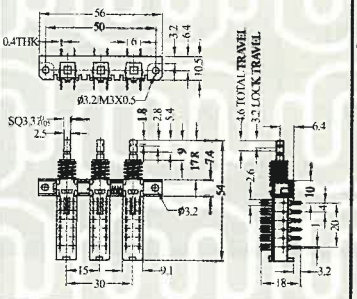


## PBS-3-IB3-JV

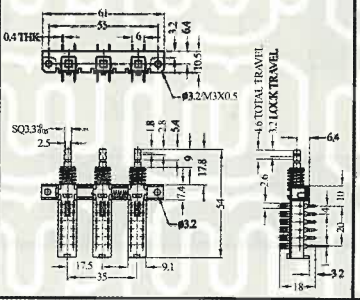


## PBS-3-IB3-KV

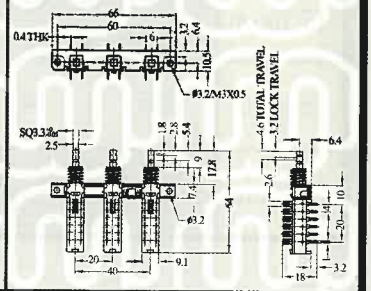


## PBS-4-IB4-GV

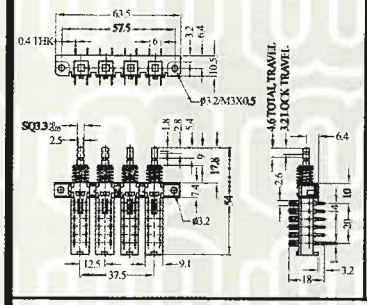


## PBS-4-IB4-HV

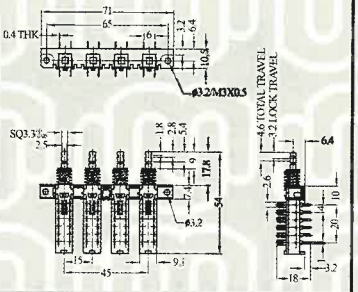


## PBS-4-IB4-JV

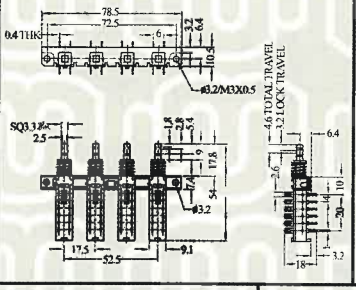


## PBS-4-IB4-KV

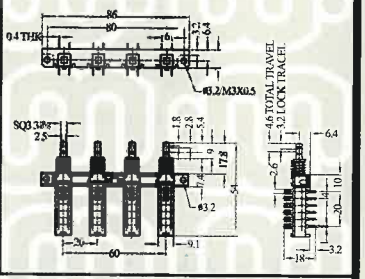


## PBS-5-IA5-MV

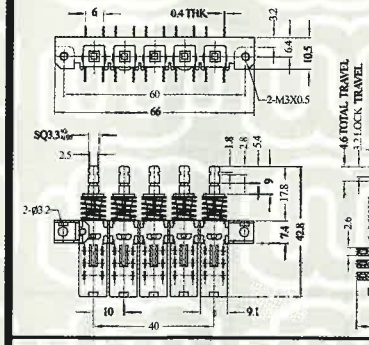


## PBS-5-IB5-GV

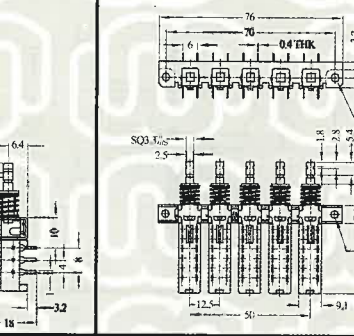


## PBS-5-IB5-HV

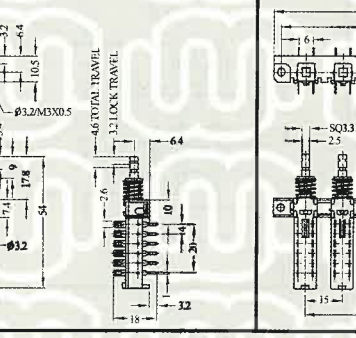


## PBS-5-IB5-KV

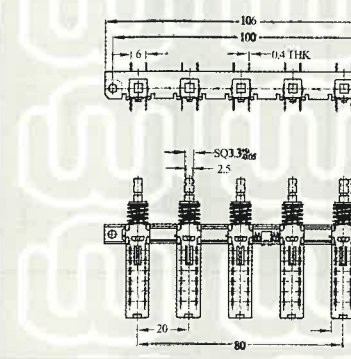


## PBS-5-IB5-JV

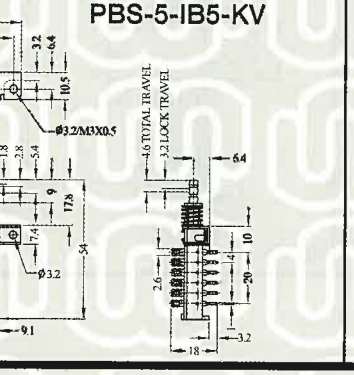


版權所有 翻印必究 ALL RIGHTS RESERVED

# PBS Series Push Switch

## PBS-10-IB10-HV

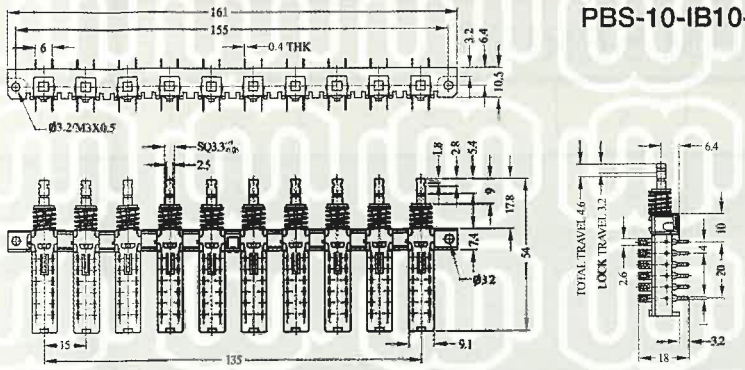


## PBS-SB-V

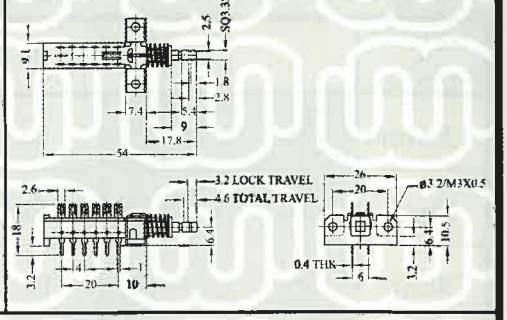


## PBS-6-IB6-GV

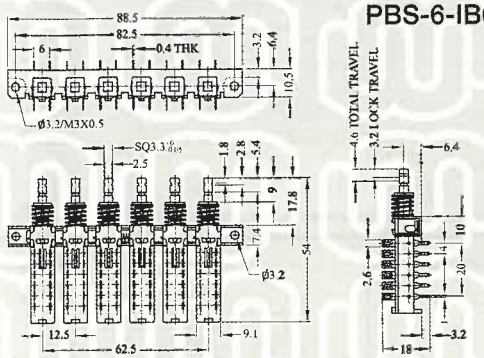


## PBS-6-IB6-HV

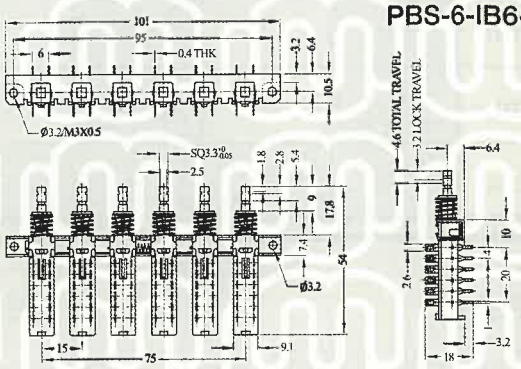


## PBS-6-IB6-JV

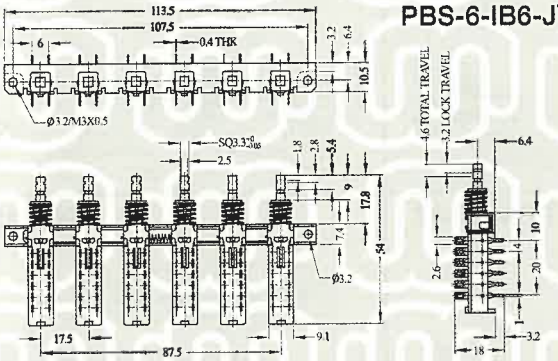


## PBS-6-IB6-KV

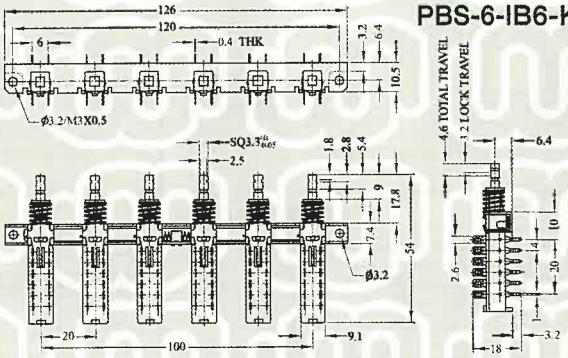


## PBS-7-IA7-MV

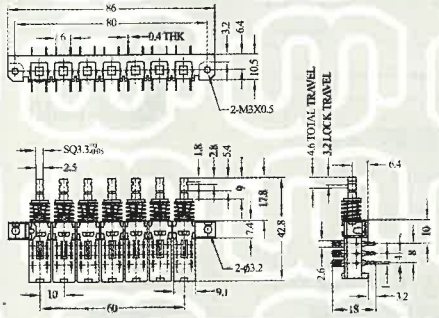


## PBS-7-IB7-GV

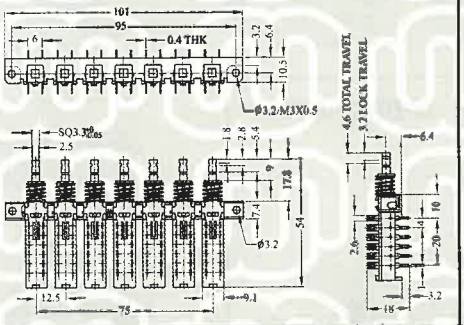


## PBS-7-IB7-HV

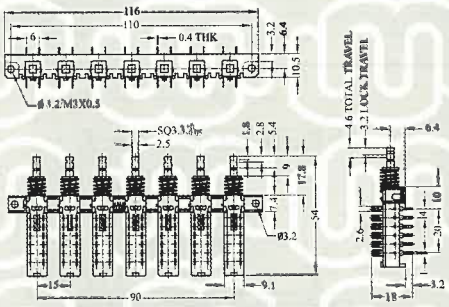


## PBS-8-IB8-HV

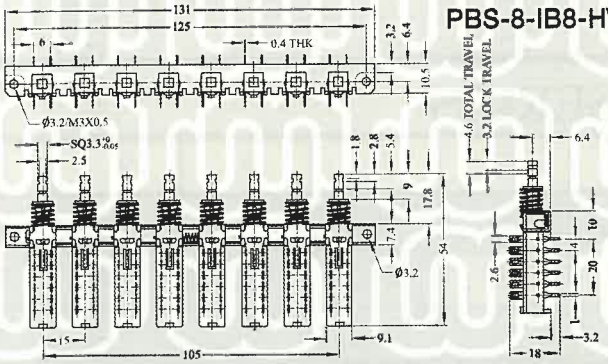


## PBS-9-IB9-JV

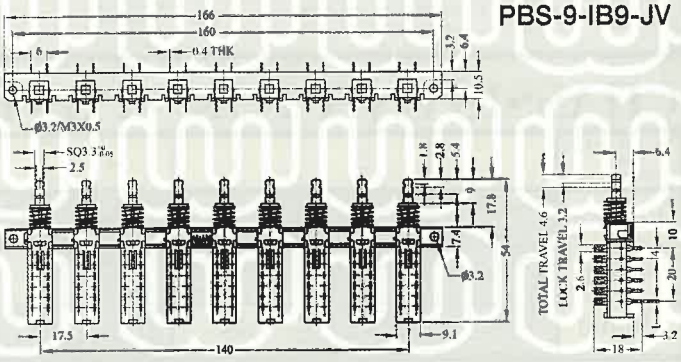

# PBS Series Push Switch

## CHASSIS UNIT FOR - PBM SERIES

| NO.OF KEY / PITCH(mm) | 1 | 2 | 3 | 4 | 5 | 6 | 7 | 8 | 9 | 10 |
|---|---|---|---|---|---|---|---|---|---|---|
| 12.5mm | | | 46 | | 71 | | | | | |
| 15mm | | | 51 | 66 | | | | | | |
| 20mm | | | 61 | | | | | | | |
| 25mm | | 37.8 | | 87 | | | | | | |
| 35mm | | 47 | | 137 | | | | | | |
| 40mm | | | | | | | 147 | 147 | | |

PBM2-IG2R

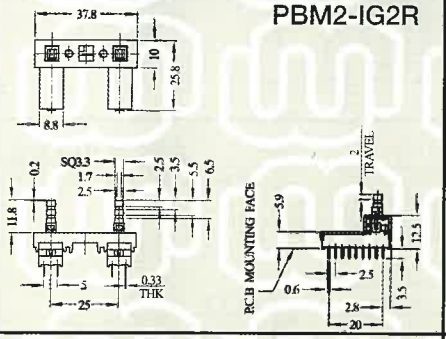


PBM2-IX2Z

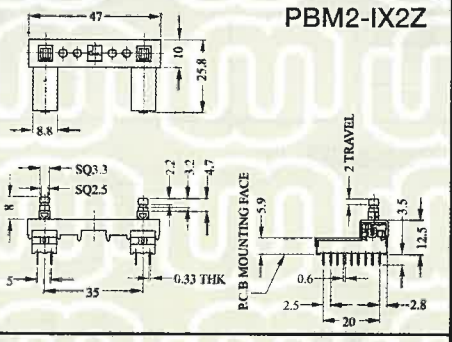


PBM33-03H

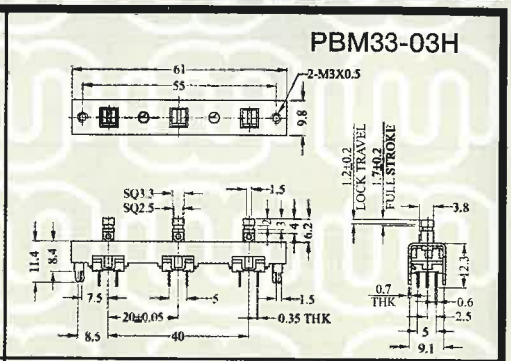


PBM32-03H

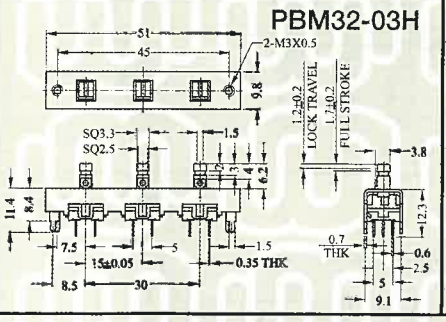


PBM4-IX4Z

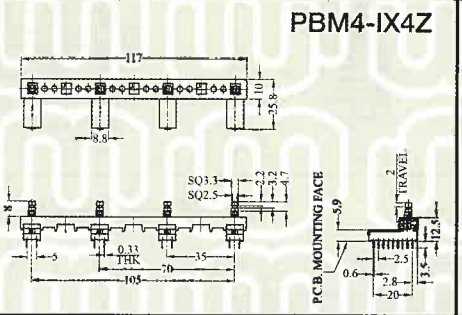


PBM42-04

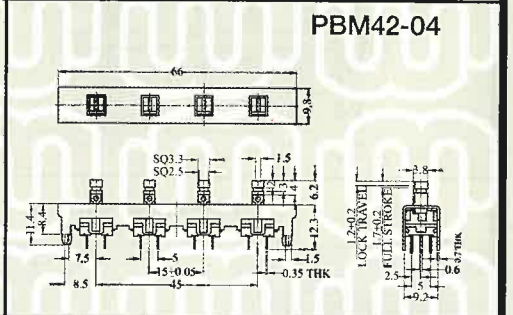


PBM7-IG70

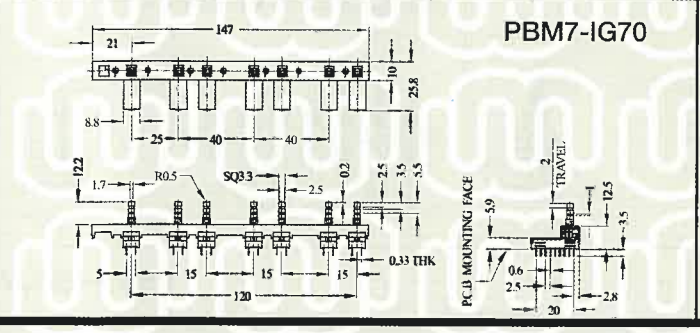


PBM8-IG80

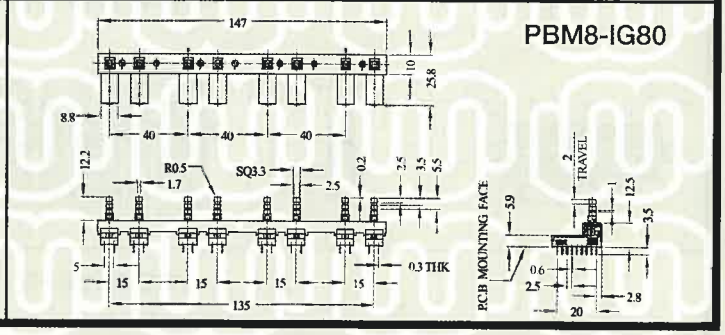


## CHASSIS UNIT FOR - PBS D SERIES

| NO.OF KEY / PITCH(mm) | 1 | 2 | 3 | 4 | 5 | 6 | 7 | 8 | 9 | 10 |
|---|---|---|---|---|---|---|---|---|---|---|
| 12.5mm | | | | | | | | | | |
| 15mm | | | | | 86 | 101 | | | | |
| 20mm | | | 66 | | | | | | | |

# PBS Series Push Switch

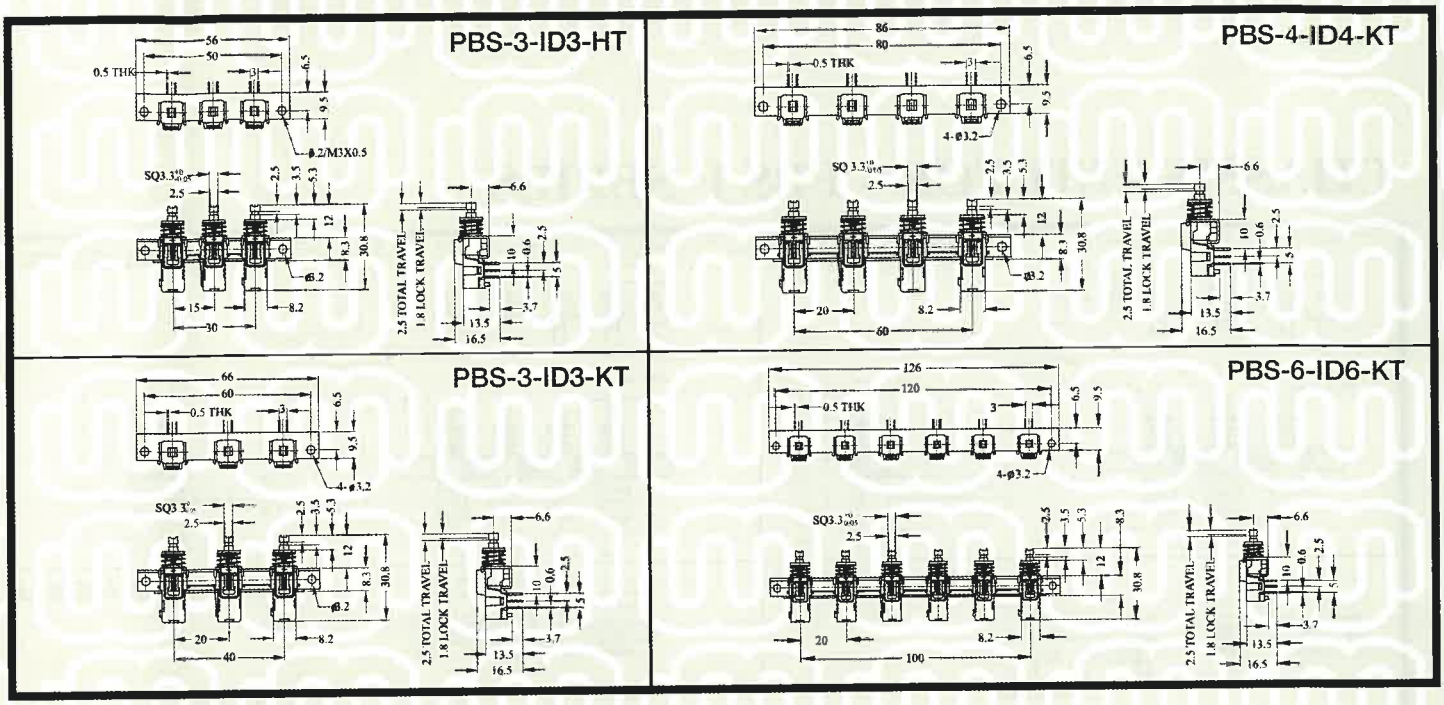


## CHASSIS UNIT FOR - PBS E SERIES

| NO. OF KEY / PITCH(MM) | 1 | 2 | 3 | 4 | 5 | 6 | 7 | 8 | 9 | 10 |
|---|---|---|---|---|---|---|---|---|---|---|
| 12.5mm | | | 56 | | | | | | | |
| 15mm | | | | | 96 | | | | | |
| 20mm | | | 66 | 86 | | 126 | | | | |

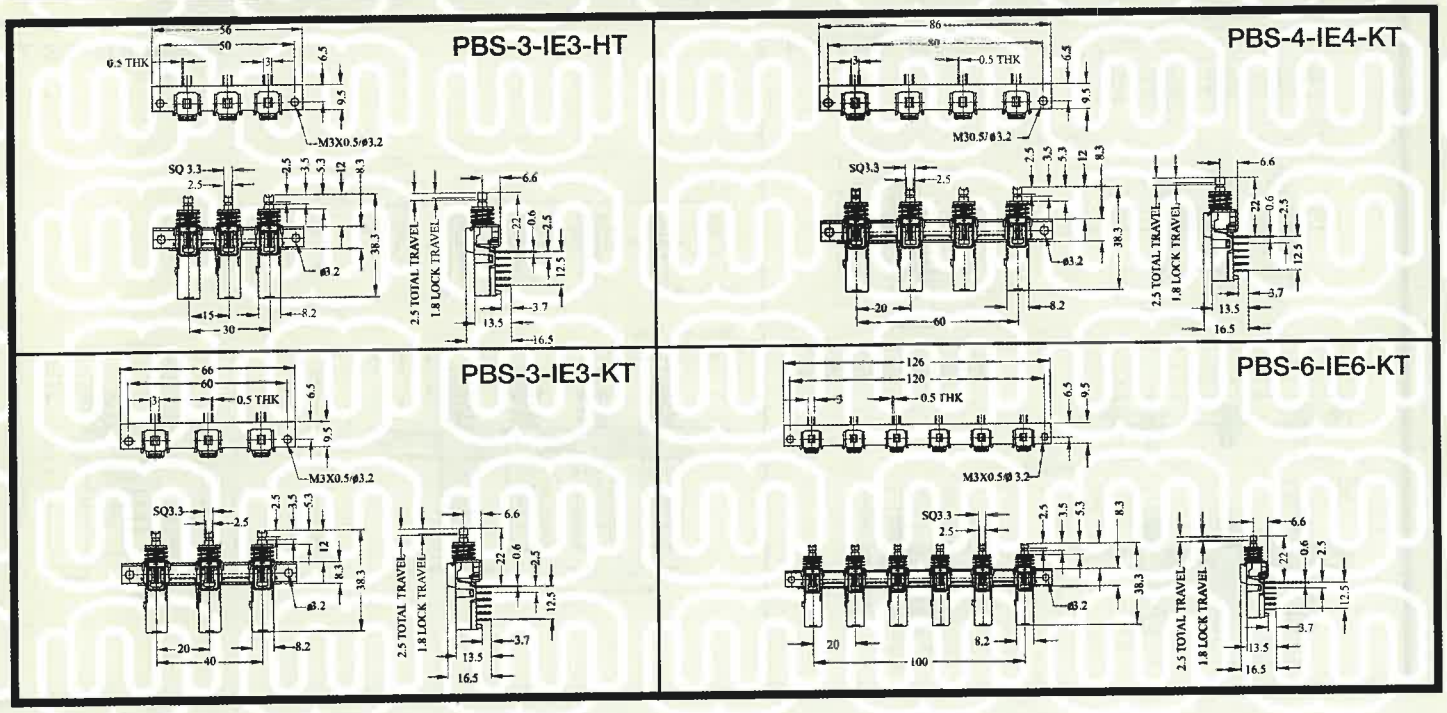




版權所有 翻印必究 ALL RIGHTS RESERVED

# CHASSIS UNIT FOR - PBS F SERIES

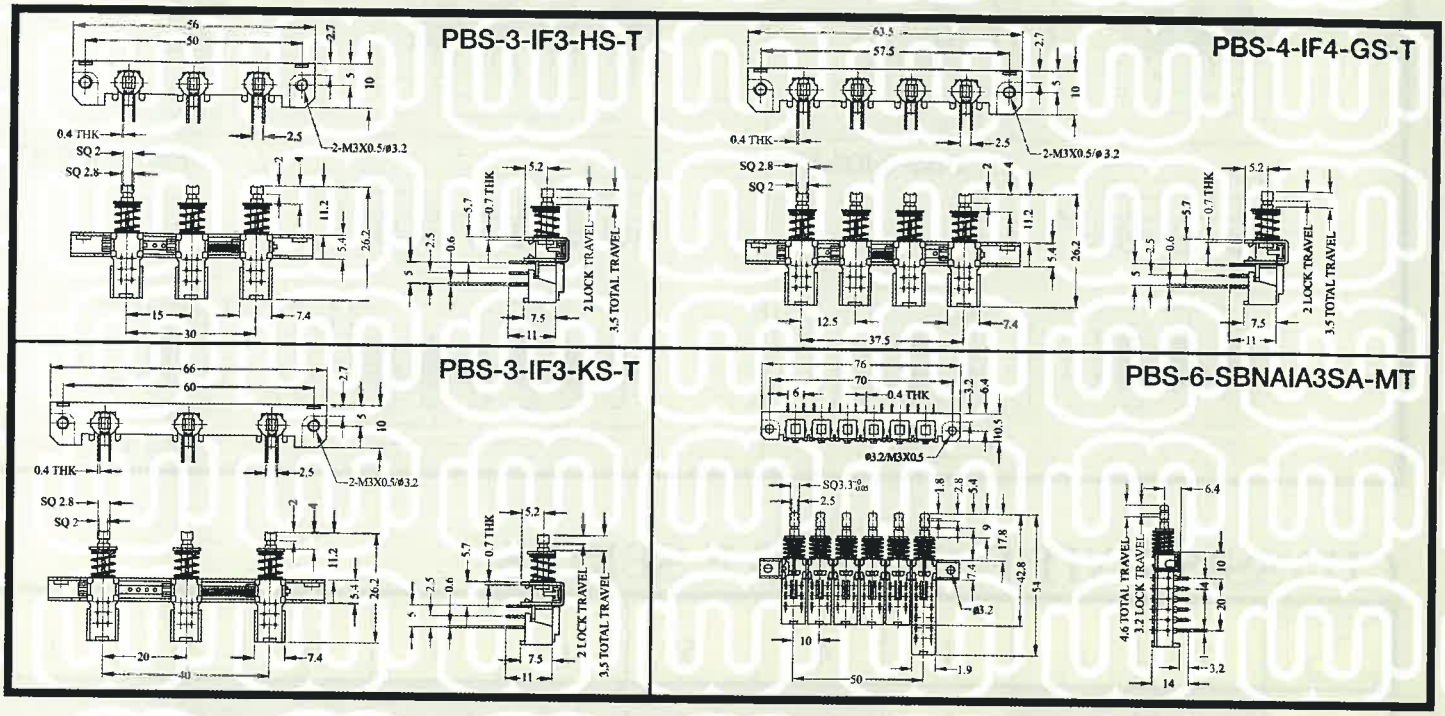


# CHASSIS UNIT FOR - PBS Q SERIES

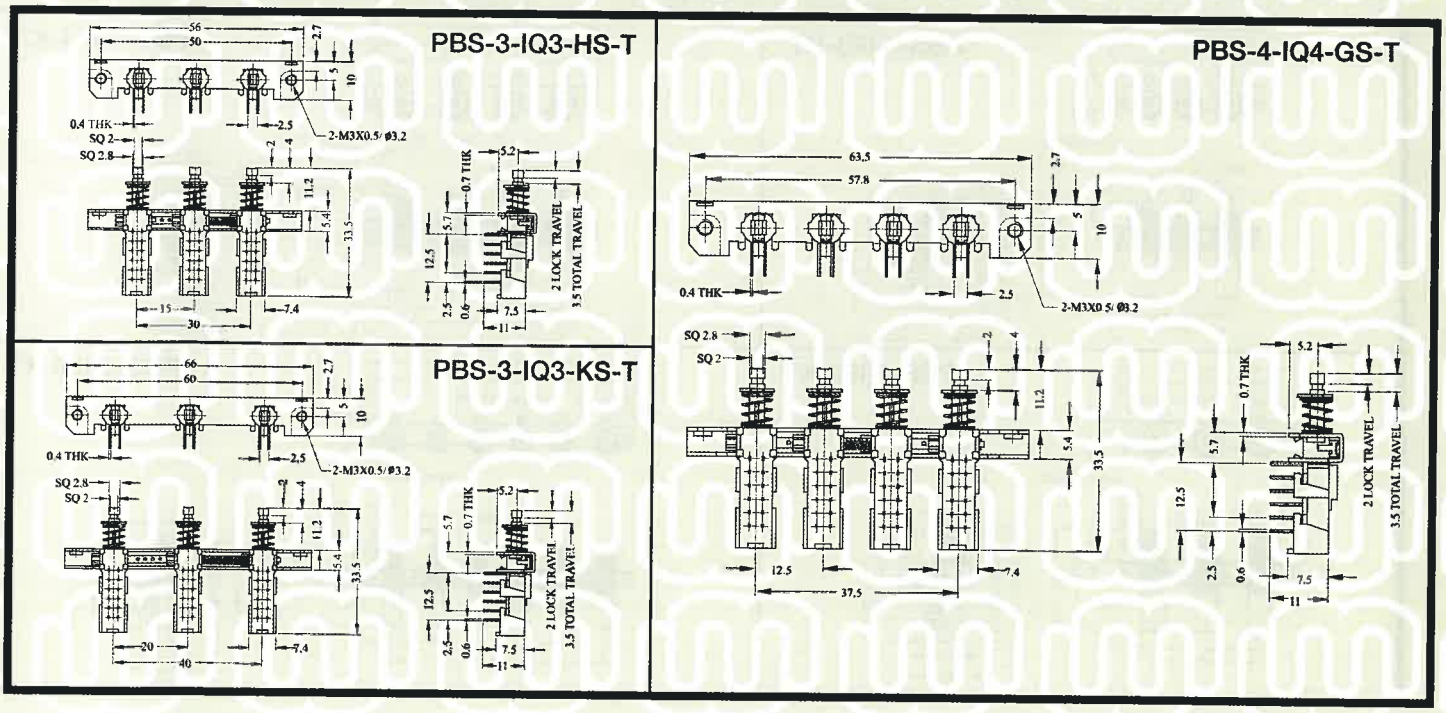




版權所有 翻印必究 ALL RIGHTS RESERVED

# Mounting Unit For Tact Switch

## TCM SERIES

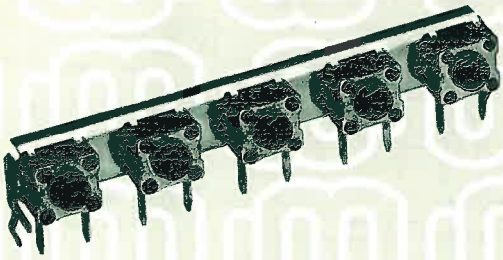

TCM = 1 5 A T

**OPERATING FORCE**

| O/ FORCE | 100gf | 130gf | 160gf | 190gf | 250gf |
|---|---|---|---|---|---|
| CODE | T | V | X | Y | Z |

**STEM LENGTH ( UNIT: mm )**

| L | 3.15 | 3.85 | 5.85 | 6.15 | 6.85 | 8.35 | 11.35 | 12.35 |
|---|---|---|---|---|---|---|---|---|
| CODE | A | B | C | D | E | F | G | H |

**NUMBER OF KEYS**

| NO.OF KEYS | 3 | 4 | 5 | 6 | 7 | 8 | 9 |
|---|---|---|---|---|---|---|---|
| CODE | 3 | 4 | 5 | 6 | 7 | 8 | 9 |

**KEY PITCH ( UNIT: mm )**

| KEY PITCH | 10 | 15 |
|---|---|---|
| CODE | 1 | 2 |

TCM SERIES

## CODE 1

TCM-SERIES (5KEYS)

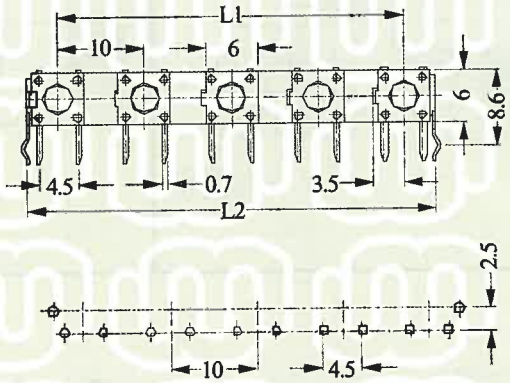


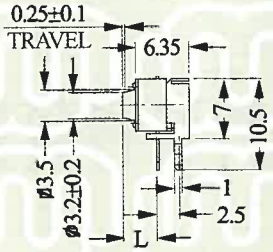


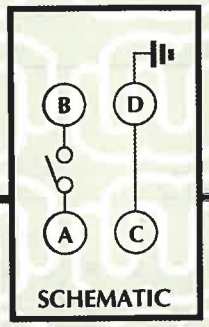


| NO . OF KEYS | 3 | 4 | 5 | 6 | 7 | 8 | 9 |
|---|---|---|---|---|---|---|---|
| L1 | 20 | - | 40 | - | 60 | - | 80 |
| L2 | 27 | - | 47 | - | 67 | - | 87 |

## CODE 2

TCM-SERIES (5KEYS)

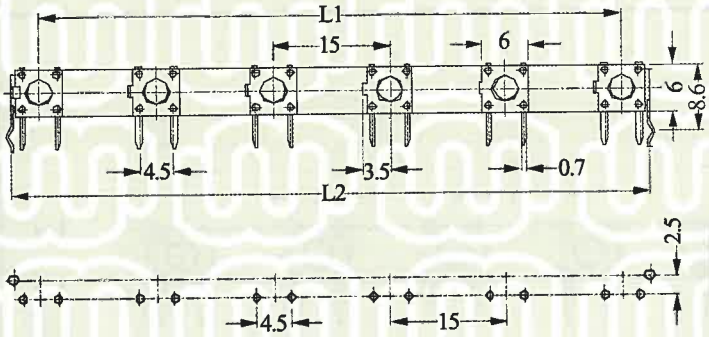


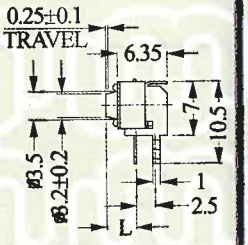


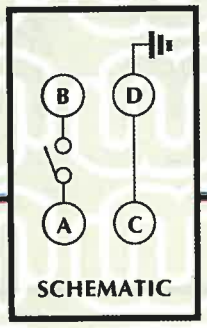


| NO . OF KEYS | 3 | 4 | 5 | 6 | 7 | 8 | 9 |
|---|---|---|---|---|---|---|---|
| L1 | - | 45 | 60 | - | - | - | - |
| L2 | - | - | 67 | - | - | - | - |

# Mounting Unit For Tact Switch

## TCM-13AT~13HZ

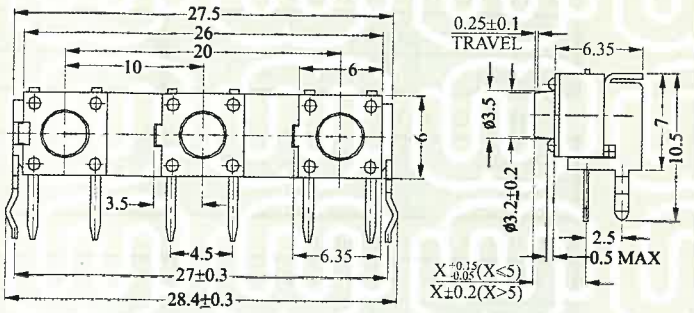


## TCM-15AT~HZ

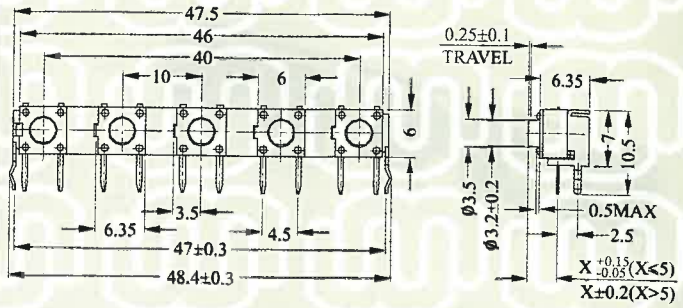


## TCM-17AT~HZ

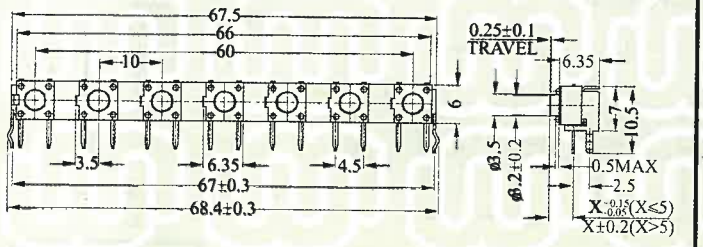


## TCM-24CAT~24CHZ

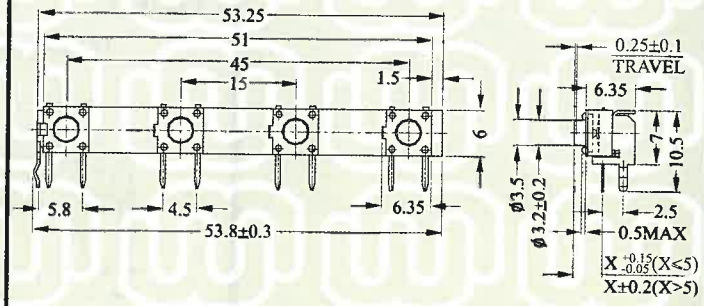


## TCM-19AT~19HZ

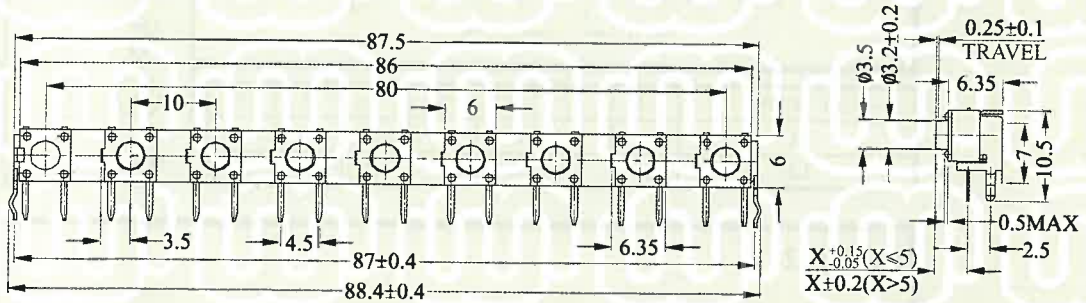


## TCM-26AT~26HZ

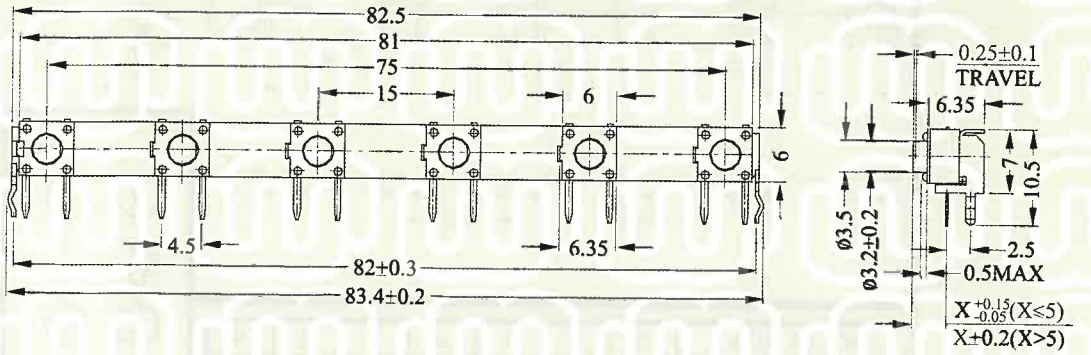




版權所有 翻印必究 ALL RIGHTS RESERVED

# Knob Table

| | | | | | |
|---|---|---|---|---|---|
| AM<br>METAL KNOB | AT<br>ADD ALUMINUM SLEEVE | AY<br>ADD ALUMINUM SLEEVE | BM<br>METAL KNOB | BU<br>METAL KNOB | BV<br>METAL KNOB |
| BI<br>METAL KNOB | FM | GA | GC | GD | GE |
| GS | GX | HG | LM<br>METAL KNOB | LS | LU<br>METAL KNOB |
| MX<br>METAL KNOB | NT | NY | PG | PM<br>METAL KNOB | RA |
| RB | RD | RG | SM<br>METAL KNOB | SU<br>METAL KNOB | TA |
| TB | TC | TD | TE | TF | TG |
| TH | TK | TP | TR | TS | TM<br>METAL KNOB |
| TO | UA<br>METAL KNOB | UB<br>METAL KNOB | UC | UD | UM<br>METAL KNOB |
| VA | VB | VC | VD | WA | WB |
| WC | WG | | | | |

# Accessory

## AZ-001

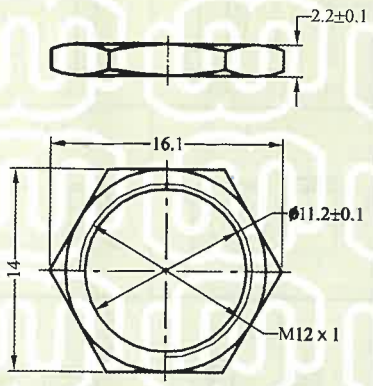


## AZ-002

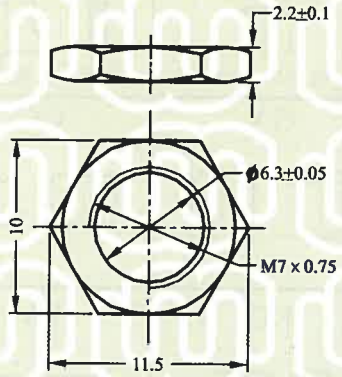


## AZ-003

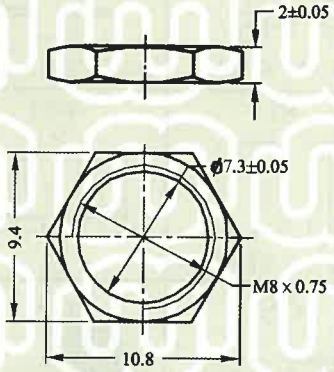


## AZ-004

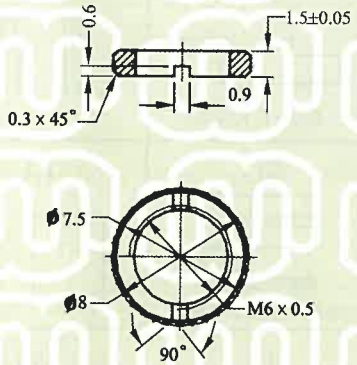


## AZ-005

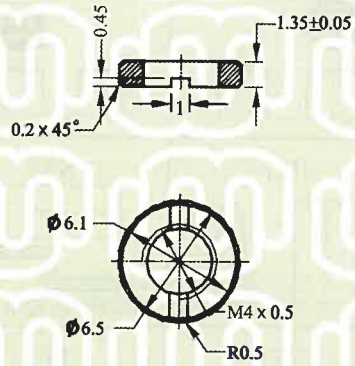


## AZ-006

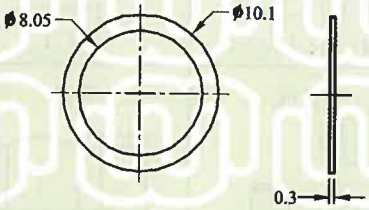


## AZ-007

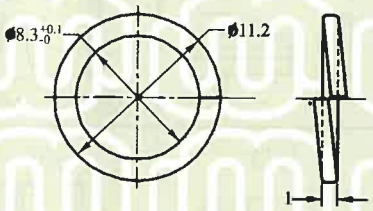


## AZ-008

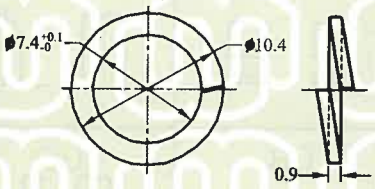


## AZ-009

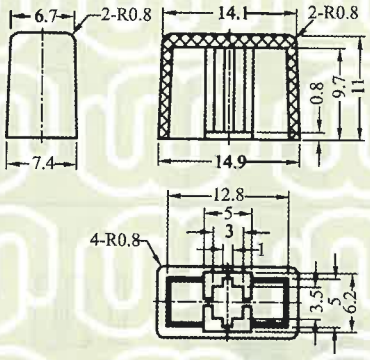

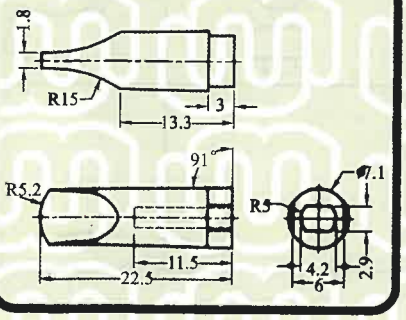
## AZ-010